Find your product and get support

FAQ | Driver | User Manual

Europe
https://aoc.com/uk/support

Россия
https://aoc.com/ru/support

Australia
https://au.aoc.com/user_manual

Hong Kong S.A.R.
https://hk.aoc.com/user_manual

中國台灣
https://tw.aoc.com/user_manual

Indonesia
https://id.aoc.com/user_manual

日本
https://jp.aoc.com/user_manual

한국
https://kr.aoc.com/user_manual

Malaysia
https://my.aoc.com/user_manual

Myanmar
https://mm.aoc.com/user_manual

New Zealand
https://nz.aoc.com/user_manual

Philippines
https://ph.aoc.com/user_manual

Singapore
https://sg.aoc.com/user_manual

ประเทศไทย
https://th.aoc.com/user_manual

Việt Nam
https://vn.aoc.com/user_manual

Middle East
https://me.aoc.com/user_manual

South Africa
https://za.aoc.com/user_manual

Brasil
https://aoc.portaltpv.com.br/

India
https://aoc.com/in-en/support

US
https://aoc.com/us/support

Canada
https://aoc.com/ca-en/support

Product information for EU/UK Energy

H41G24M361554A

AOC

Quick Start Guide

Q24B36X

www.aoc.com
©2025 AOC.All Rights Reserved

HDMI HIGH-DEFINITION MULTIMEDIA INTERFACE

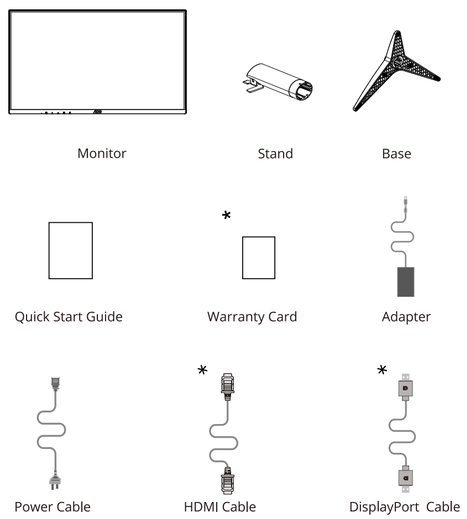

*Different according to countries/regions
Display design may differ from that illustrated

1

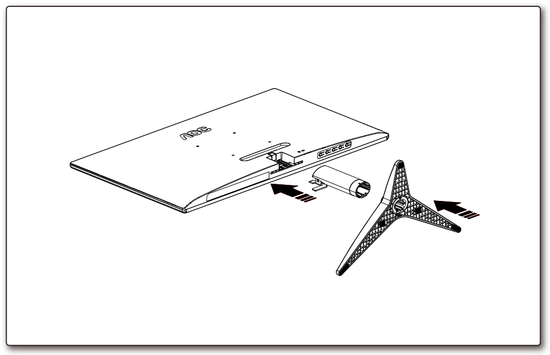

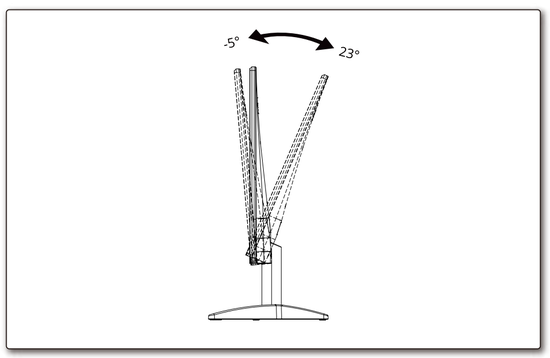

2

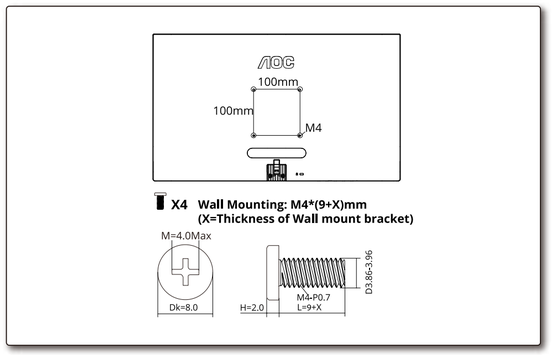

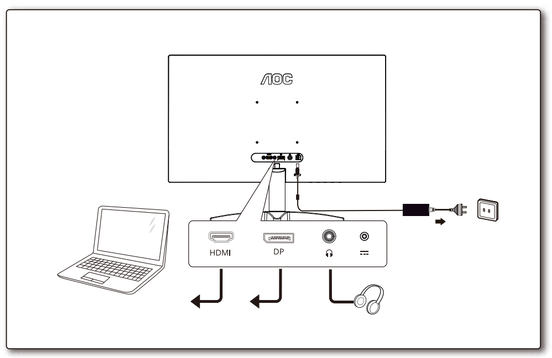

3

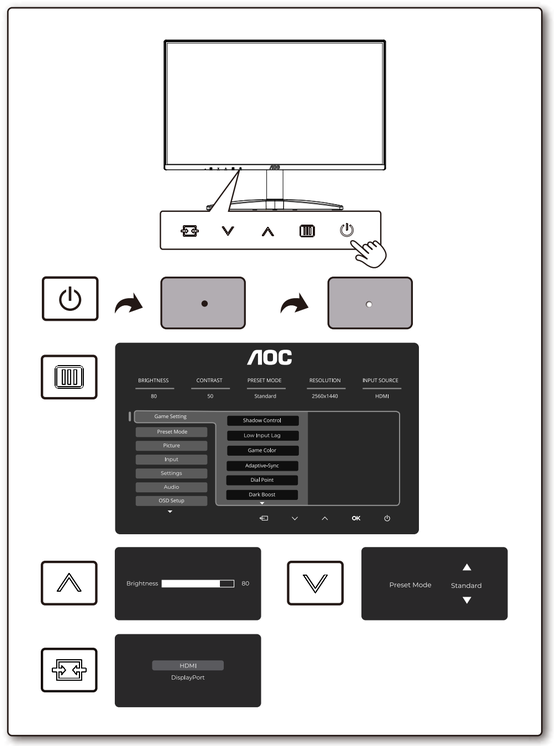

4

General Specification

Panel	Model Name	Q24B36X	
	Driving System	TFT Color LCD	
	Viewable Image Size	60.4cm Diagonal(23.8" Wide Screen)	
	Pixel Pitch	0.2058mm(H) x 0.2058mm(V)	
Others	Horizontal Scan Range	30k~230kHz	
	Horizontal Scan Size(Maximum)	526.84mm	
	Vertical Scan Range	48~144Hz	
	Vertical Scan Size(Maximum)	296.35mm	
	Max Resolution	2560x1440@144Hz	
	Plug & Play	VESA DDC2B/CI	
	Power Source	19V ⎓ 1.9A	
	Power Consumption	Typical (default brightness and contrast)	23W*
		Max. (brightness =100, contrast =100)	≤ 43W*
		Standby mode	≤ 0.3W
	Dimensions(with stand)	542.4x417.1x197.9mm (WxHxD)	
	Net Weight	2.5kg	
Physical Characteristics	Connector Type	HDMI/DisplayPort/Earphone out	
	Signal Cable Type	Detachable	
Environmental	Temperature	Operating	0°C~40°C
		Non-Operating	-25°C~55°C
	Humidity	Operating	10%~85% (non-condensing)
		Non-Operating	5%~93% (non-condensing)
	Altitude	Operating	0m~5000m (0ft~16404ft)
		Non-Operating	0m~12192m (0ft~40000ft)

*:The power specification is the power consumption of display (including power adapter) tested at the input end of the power adapter.