Find your product and get support

FAQ | Driver | User Manual

Europe
https://aoc.com/uk/support

Россия
https://aoc.com/ru/support

Australia
https://au.aoc.com/user_manual

Hong Kong S.A.R.
https://hk.aoc.com/user_manual

中國台灣
https://tw.aoc.com/user_manual

Indonesia
https://id.aoc.com/user_manual

日本
https://jp.aoc.com/user_manual

한국
https://kr.aoc.com/user_manual

Malaysia
https://my.aoc.com/user_manual

Myanmar
https://mm.aoc.com/user_manual

New Zealand
https://nz.aoc.com/user_manual

Philippines
https://ph.aoc.com/user_manual

Singapore
https://sg.aoc.com/user_manual

ประเทศไทย
https://th.aoc.com/user_manual

Việt Nam
https://vn.aoc.com/user_manual

Middle East
https://me.aoc.com/user_manual

South Africa
https://za.aoc.com/user_manual

Brasil
https://aoc.portaltpv.com.br/

India
https://aoc.com/in-en/support

US
https://aoc.com/us/support

Canada
https://aoc.com/ca-en/support

HDMI
HIGH-DEFINITION MULTIMEDIA INTERFACE

Product information for EU/UK Energy

H41G24M261585A

AOC GAMING

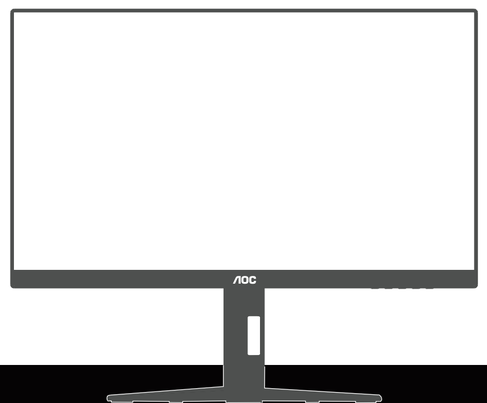

QUICK START GUIDE

24G4HA

AOC GAMING MONITOR

©2025 AOC. All rights reserved

WWW.AOC.COM

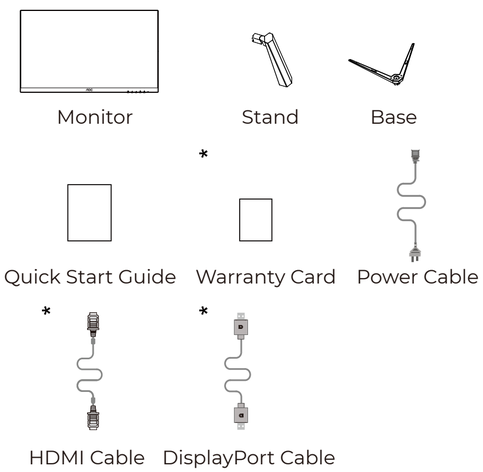

***Different according to countries/regions**
Display design may differ from that illustrated

1

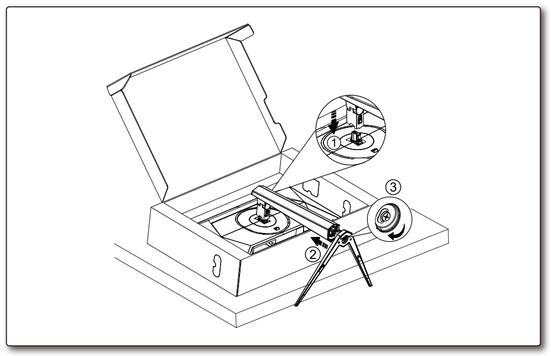

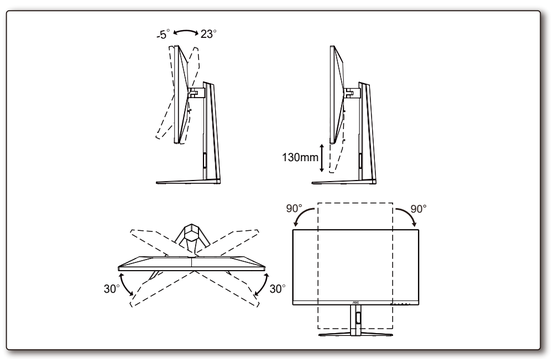

2

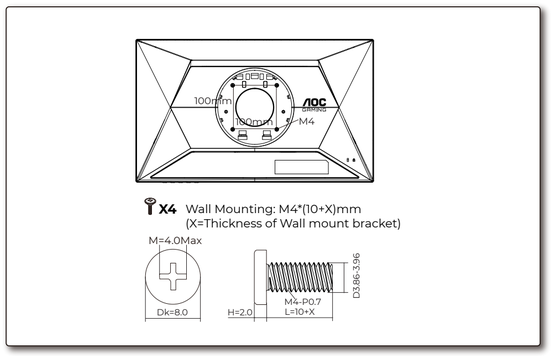

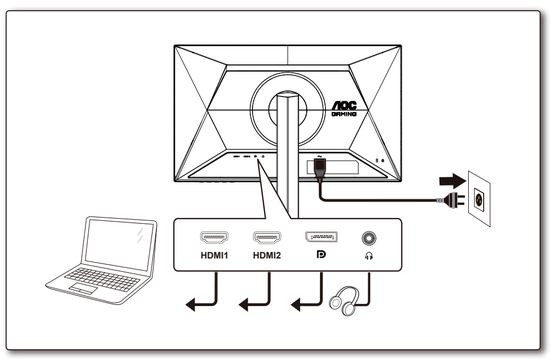

3

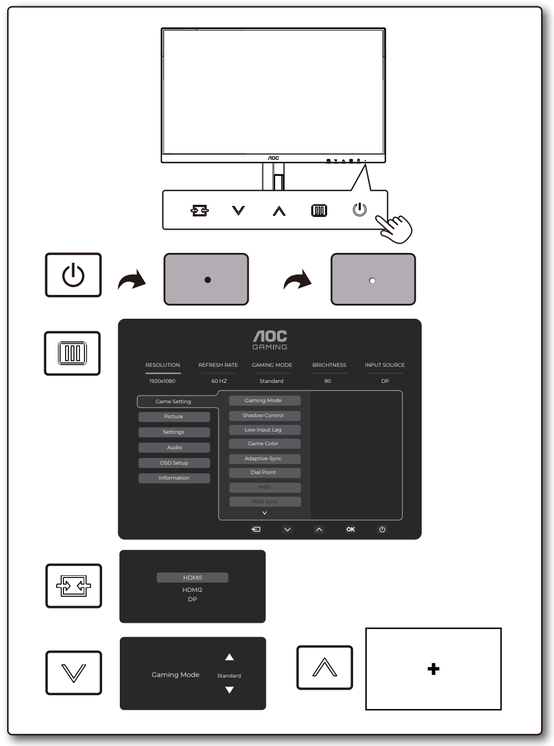

4

General Specification

Panel	Model Name	24G4HA	
	Driving System	TFT Color LCD	
	Viewable Image Size	60.5cm Diagonal (23.8" Wide Screen)	
	Pixel Pitch	0.2745mm(H)x0.2745mm(V)	
Others	Horizontal Scan Range	30k~230kHz	
	Horizontal Scan Size(Maximum)	527.04mm	
	Vertical Scan Range	48~200Hz	
	Vertical Scan Size(Maximum)	296.46mm	
	Max Resolution	1920x1080@200Hz	
	Plug & Play	VESA DDC2B/CI	
	Power Source	100-240V~, 50/60Hz, 1.5A	
	Power Consumption	Typical(Default Brightness And Contrast)	19W
		Max. (Brightness = 100, Contrast =100)	≤ 42W
		Standby Mode	≤ 0.3W
	Dimensions(with stand)	540.0X(382.1~495.1)X240.0mm (WxHxD)	
	Net Weight	3.93kg	
Physical Characteristics	Connector Type	HDMIx2/DisplayPort/Earphone Out	
	Signal Cable Type	Detachable	
	Built-In Speaker	2Wx2	
Environmental	Temperature	Operating	0°C~40°C
		Non-Operating	-25°C~55°C
	Humidity	Operating	10%~85% (Non-Condensing)
		Non-Operating	5%~93% (Non-Condensing)
	Altitude	Operating	0m~5000m (0ft~16404ft)
		Non-Operating	0m~12192m (0ft~40000ft)