LCD Monitor User Manual

U2790PQU

LED backlight

www.aoc.com

©2018 AOC. All Rights Reserved.

Safety....3
National Conventions....3
Power....4
Installation....5
Cleaning....6
Other....7
Setup....8
Contents in Box....8
Setup Base....9
Adjusting Viewing Angle....10
Connecting the Monitor....11
Wall Mounting....12
Adjusting....13
Hotkeys....13
OSD Setting....15
Luminance....16
Image Setup....17
Color Setup....18
Picture Boost....19
OSD Setup....20
Extra....21
Exit....22
LED Indicator....23
Driver....24
i-Menu....24
e-Saver....25
Screen+....26
Troubleshoot....27
Specification....29
General Specification....29
Preset Display Modes....30
Pin Assignments....31
Plug and Play....32

Safety

National Conventions

The following subsections describe notational conventions used in this document.

Notes, Cautions, and Warnings

Throughout this guide, blocks of text may be accompanied by an icon and printed in bold type or in italic type. These blocks are notes, cautions, and warnings, and they are used as follows:

NOTE: A NOTE indicates important information that helps you make better use of your computer system**.**

CAUTION: A CAUTION indicates either potential damage to hardware or loss of data and tells you how to avoid the problem.

WARNING: A WARNING indicates the potential for bodily harm and tells you how to avoid the problem. Some warnings may appear in alternate formats and may be unaccompanied by an icon. In such cases, the specific presentation of the warning is mandated by regulatory authority.

Power

The monitor should be operated only from the type of power source indicated on the label. If you are not sure of the type of power supplied to your home, consult your dealer or local power company.

The monitor is equipped with a three-pronged grounded plug, a plug with a third (grounding) pin. This plug will fit only into a grounded power outlet as a safety feature. If your outlet does not accommodate the three-wire plug, have an electrician install the correct outlet, or use an adapter to ground the appliance safely. Do not defeat the safety purpose of the grounded plug.

Unplug the unit during a lightning storm or when it will not be used for long periods of time. This will protect the monitor from damage due to power surges.

Do not overload power strips and extension cords. Overloading can result in fire or electric shock.

To ensure satisfactory operation, use the monitor only with UL listed computers which have appropriate configured receptacles marked between 100 - 240V ~, Min. 5A

The wall socket shall be installed near the equipment and shall be easily accessible.

Installation

Do not place the monitor on an unstable cart, stand, tripod, bracket, or table. If the monitor falls, it can injure a person and cause serious damage to this product. Use only a cart, stand, tripod, bracket, or table recommended by the manufacturer or sold with this product. Follow the manufacturer's instructions when installing the product and use mounting accessories recommended by the manufacturer. A product and cart combination should be moved with care.

Never push any object into the slot on the monitor cabinet. It could damage circuit parts causing a fire or electric shock. Never spill liquids on the monitor.

Do not place the front of the product on the floor.

Leave some space around the monitor as shown below. Otherwise, air-circulation may be inadequate hence overheating may cause a fire or damage to the monitor.

See below the recommended ventilation areas around the monitor when the monitor is installed on the wall or with the stand:

Installde on the wall

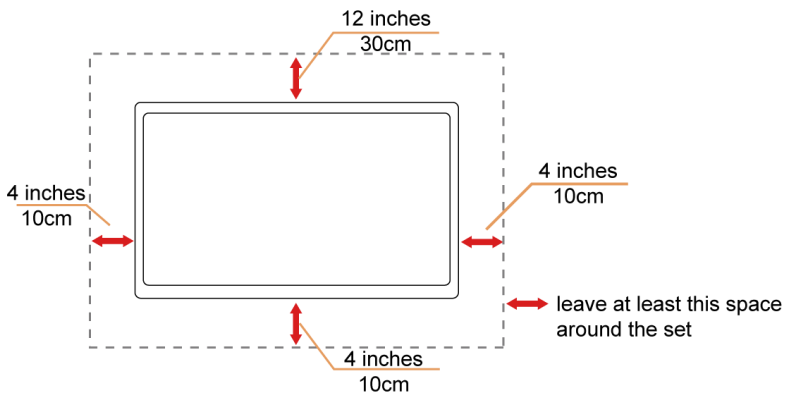

Installde with stand

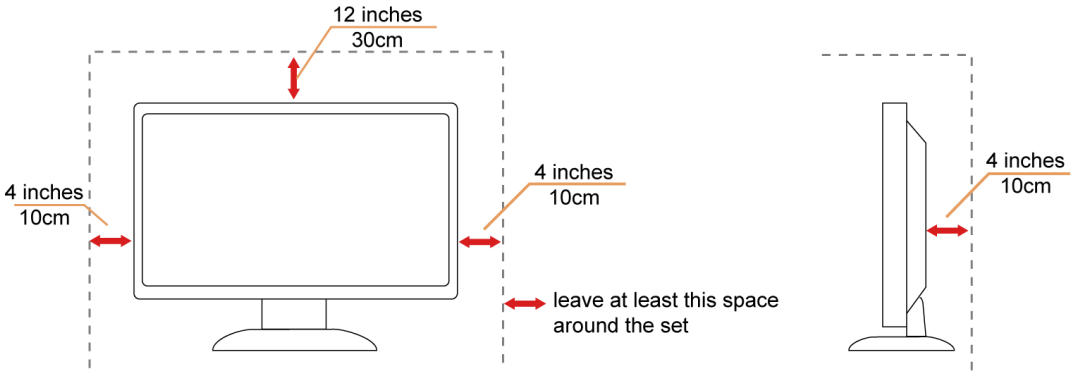

Cleaning

Clean the cabinet regularly with cloth. You can use soft-detergent to wipe out the stain, instead of strong-detergent which will cauterize the product cabinet.

When cleaning, make sure no detergent is leaked into the product. The cleaning cloth should not be too rough as it will scratch the screen surface.

Please disconnect the power cord before cleaning the product.

Other

If the product is emitting a strange smell, sound or smoke, disconnect the power plug IMMEDIATELY and contact a Service Center.

Make sure that the ventilating openings are not blocked by a table or curtain.

Do not engage the LCD monitor in severe vibration or high impact conditions during operation.

Do not knock or drop the monitor during operation or transportation.

For display with glossy bezel the user should consider the placement of the display as the bezel may cause disturbing reflections from surrounding light and bright surfaces.

Setup

Contents in Box

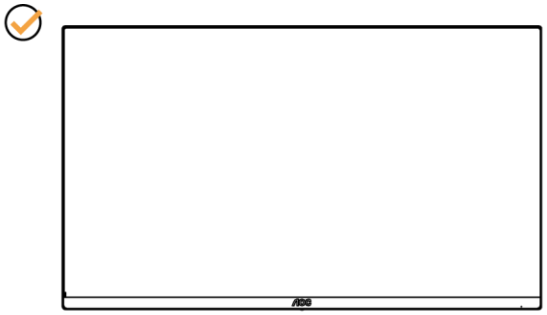

Monitor

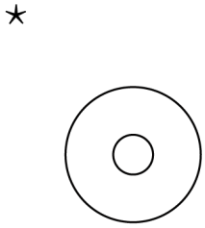

CD Manual

Warranty Card

Stand

Base

Power Cable

DP Cable

HDMI Cable

USB Cable

* Not all signal cables (DP, HDMI, USB cables), CD manual will be provided for all countries and regions. Please check with the local dealer or AOC branch office for confirmation.

Setup Base

Please setup or remove the base following the steps as below.

Please place the monitor on a soft and flat surface to prevent the scratch.

Setup:

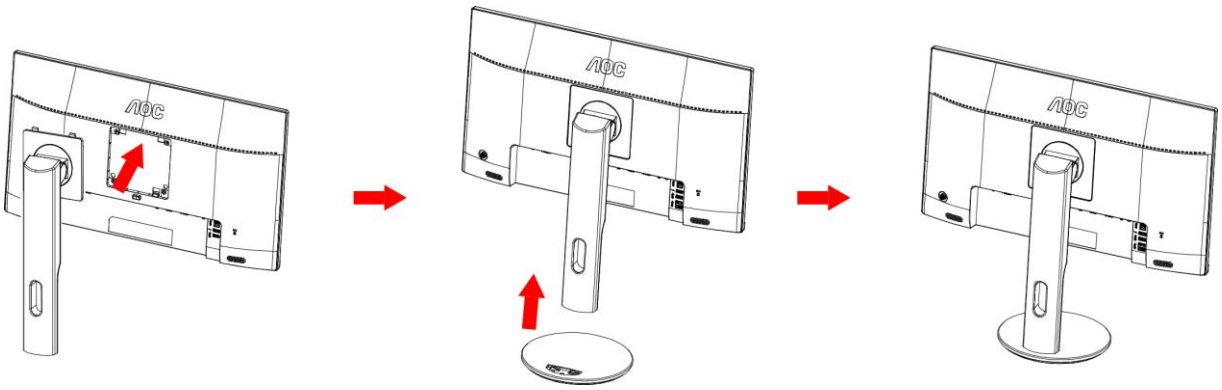

Remove:

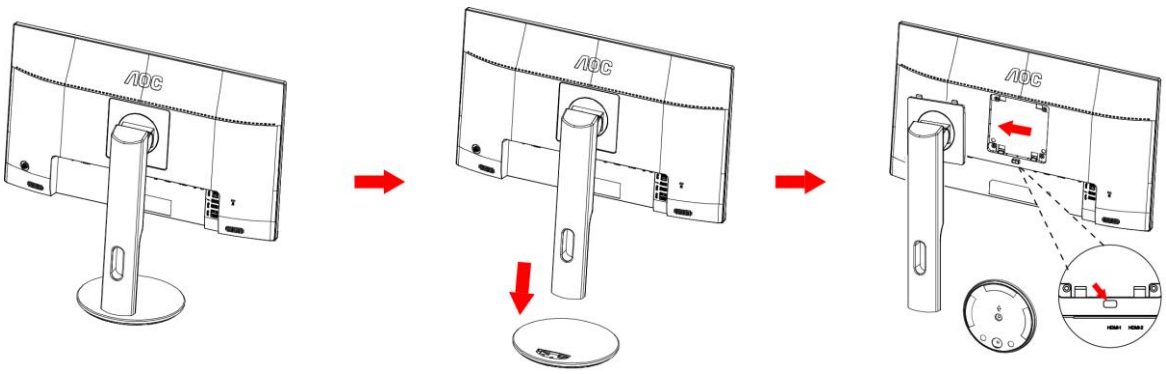

Adjusting Viewing Angle

For optimal viewing, it is recommended to look at the full face of the monitor, and then adjust the monitor's angle to your own preference.

Hold the stand so you will not topple the monitor when you change the monitor's angle.

NOTE:

Do not adjust the viewing angle over 21 degrees in order to avoid damage.

Connecting the Monitor

Cable Connections In Back of Monitor and Computer:

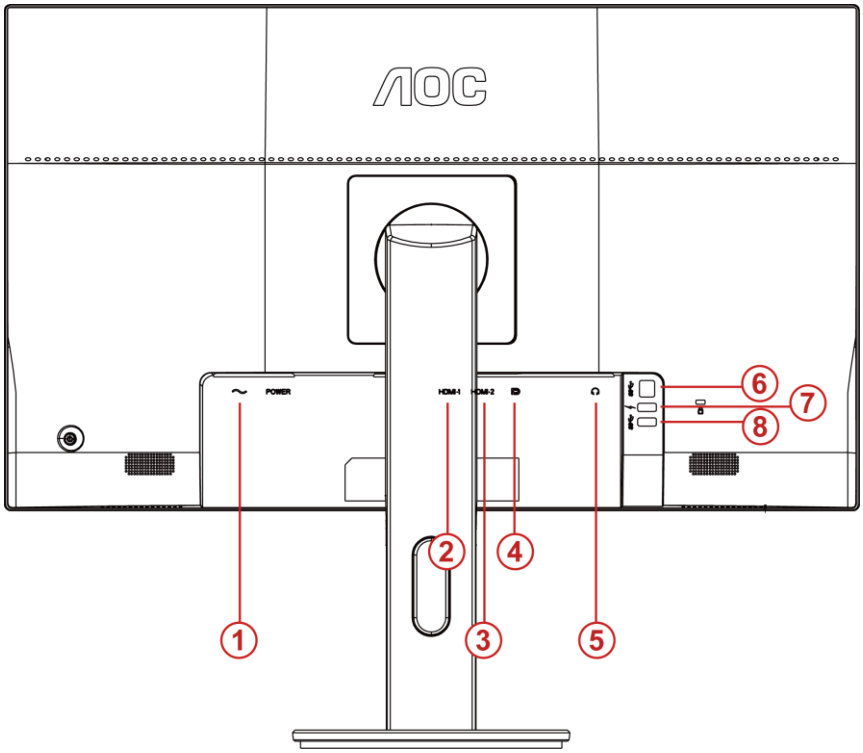

1 Power

2 HDMI-1

3 HDMI-2

4 DP

5 Earphone out

6 USB3.0-PC(USB upstream)

7 USB3.0+ fast charging

8 USB3.0

To protect equipment, always turn off the PC and LCD monitor before connecting.

1. Connect the power cable to the AC port on the back of the monitor.
2. (Optional – Requires a video card with HDMI port) - Connect one end of the HDMI cable to the back of the monitor and connect the other end to the computer's HDMI port.
3. (Optional – Requires a video card with DP port) - Connect one end of the DP cable to the back of the monitor and connect the other end to the computer's DP port.
4. Turn on your monitor and computer.

If your monitor displays an image, installation is complete. If it does not display an image, please refer Troubleshooting.

Wall Mounting

Preparing to Install An Optional Wall Mounting Arm.

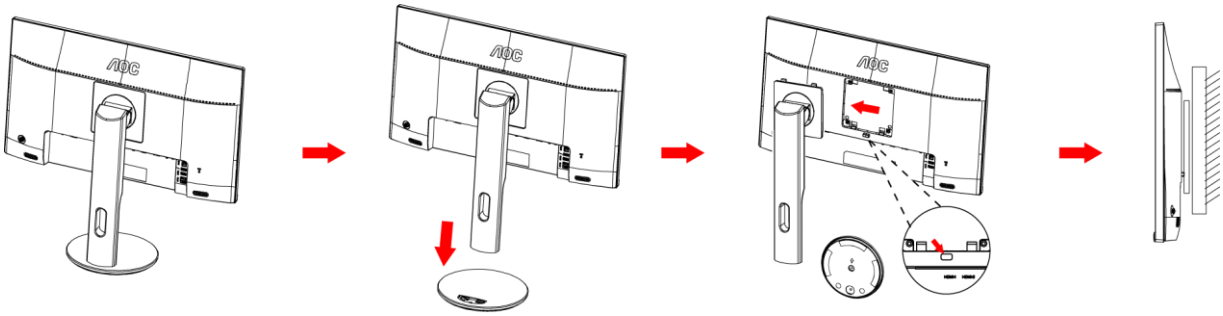

This monitor can be attached to a wall mounting arm you purchase separately. Disconnect power before this procedure. Follow these steps:

1. Remove the base.
2. Follow the manufacturer's instructions to assemble the wall mounting arm.
3. Place the wall mounting arm onto the back of the monitor. Line up the holes of the arm with the holes in the back of the monitor.
4. Insert the 4 screws into the holes and tighten.
5. Reconnect the cables. Refer to the user's manual that came with the optional wall mounting arm for instructions on attaching it to the wall.

Noted : VESA mounting screw holes are not available for all models, please check with the dealer or official department of AOC.

Adjusting

Hotkeys

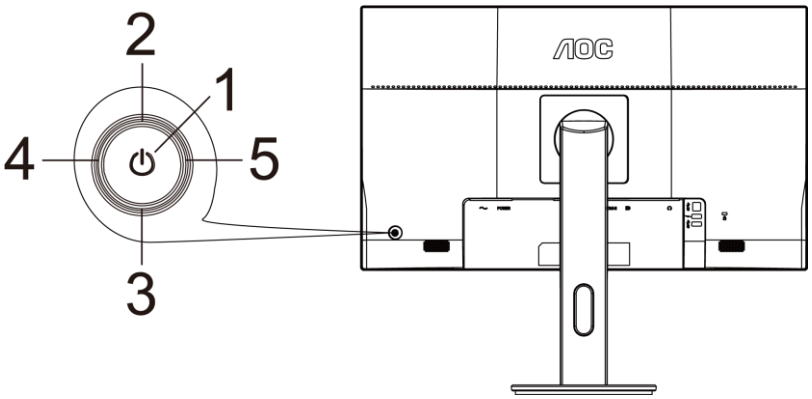

1	Menu/Enter/ Power
2	Source/Auto/Exit
3	ECO
4	Volume
5	Clear Vision

Source/Auto/Exit

When the OSD is closed, press "up" button will be Source hot key function. When the OSD is closed, press "up" button continuously about 2 second to do auto configure (Only for the models with D-Sub).

Volume

When there is no OSD, press "▶" to active volume adjustment bar, press ◀ or ▶ to adjust volume(Only for the models with Audio)

ECO

When there is no OSD, press "down" to active ECO adjustment bar, press left or right to adjust ECO mode.

Power/Menu/Enter

Press the Power button to turn on the monitor.

When there is no OSD, Press to display the OSD or confirm the selection. Press about 2 second to turn off the monitor

Clear Vision

1. When there is no OSD, Press the “◀” button to activate Clear Vision.
2. Use the “◀” or “▶” buttons to select between weak, medium, strong, or off settings. Default setting is always “off”.

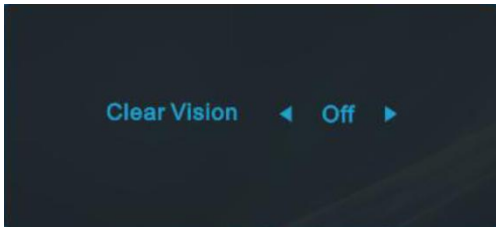

3. Press and hold “◀” button for 5 seconds to activate the Clear Vision Demo, and a message of “Clear Vision Demo: on” will be display on the screen for a duration of 5 seconds. Press Menu or Exit button, the message will disappear. Press and hold “◀” button for 5 seconds again, Clear Vision Demo will be off.

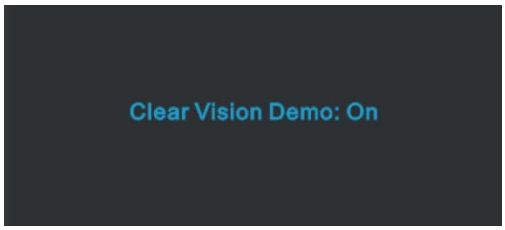

Clear Vision function provides the best image viewing experience by converting low resolution and blurry images into clear and vivid images.

OSD Setting

Basic and simple instruction on the control keys.

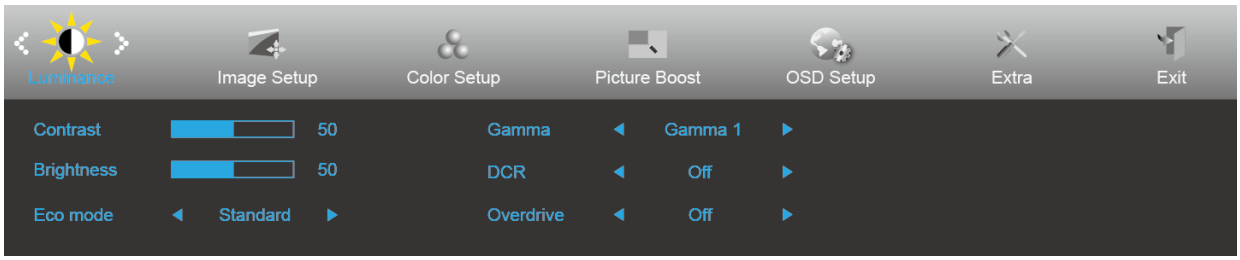

1. Press the **MENU-button** to activate the OSD window.
2. Press ◀ **or** ▶ to navigate through the functions. Once the desired function is highlighted, press the ▼ to activate it. If there is a sub-menu, press ◀/▶/▲/▼ to navigate through the sub-menu functions.
3. Press ◀ **or** ▶ to change the settings of the selected function. Press ▲ **AUTO** to exit. If you want to adjust any other function, repeat steps 2-3.
4. OSD lock function: When the OSD menu is closed, press and hold the “Down” key for about 10 seconds to lock or unlock the OSD menu.

Notes:

1. If the product has only one signal input, the item of "Input Select" is disabled.
2. If the product screen size is 4:3 or input signal resolution is native resolution, the item of "Image Ratio" is disabled.
3. One of Clear vision, DCR, Color Boost, and Picture Boost functions is activated; the other three functions are turned off accordingly.

Luminance

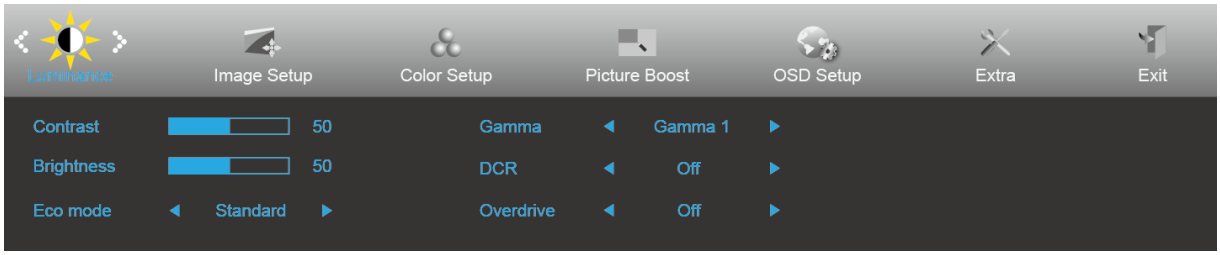

1 Press **MENU** (Menu) to display menu.

2 Press ◀ or ▶ to select (Luminance), and press ▼ to enter.

3 Press ◀/▶/▲/▼ to select submenu.

4 Press ◀ or ▶ to adjust.

5 Press ▲ to exit.

	Contrast	0-100		Contrast from Digital-register.
	Brightness	0-100		Backlight Adjustment
	Eco mode	Standard		Standard Mode
		Text		Text Mode
		Internet		Internet Mode
		Game		Game Mode
		Movie		Movie Mode
		Sports		Sports Mode
		Uniformity		Uniformity Mode
	Gamma	Gamma1		Adjust to Gamma 1
		Gamma2		Adjust to Gamma 2
		Gamma3		Adjust to Gamma 3
	DCR	Off		Disable dynamic contrast ratio
		On		Enable dynamic contrast ratio
	OverDrive	Weak		Adjust the response time.
		Medium		
		Strong		
		Off		

Image Setup

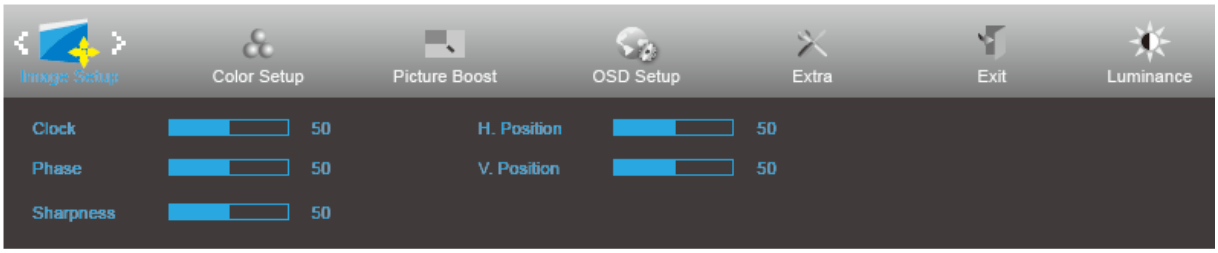

1 Press **MENU** (Menu) to display menu.

2 Press ◀ or ▶ to select (Image Setup), and press ▼ to enter.

3 Press ◀/▶/▲/▼ to select submenu.

4 Press ◀ or ▶ to adjust.

5 Press ▲ to exit.

	Clock	0-100	Adjust picture Clock to reduce Vertical-Line noise.
	Phase	0-100	Adjust Picture Phase to reduce Horizontal-Line noise.
	Sharpness	0-100	Adjust picture sharpness.
	H.Position	0-100	Adjust the horizontal position of the picture.
	V.Position	0-100	Adjust the vertical position of the picture.

(Only for VGA Model)

Color Setup

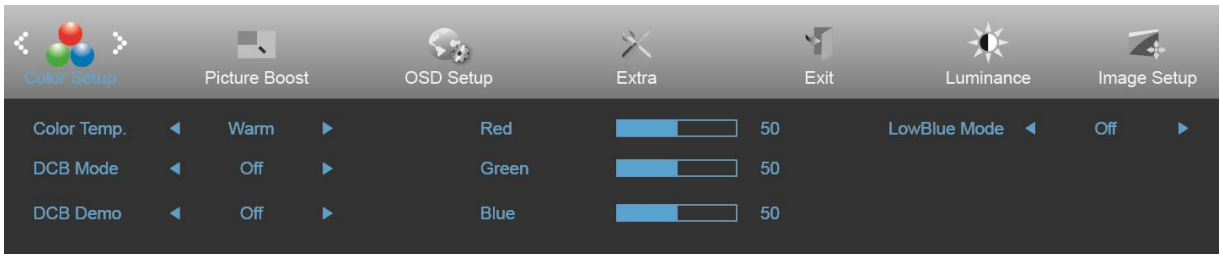

1 Press **MENU** (Menu) to display menu.

2 Press ◀ or ▶ to select (Color Setup), and press ▼ to enter.

3 Press ◀/▶/▲/▼ to select submenu.

4 Press ◀ or ▶ to adjust.

5 Press ▲ to exit.

	Color Temp.	Warm		Recall Warm Color Temperature from EEPROM.
		Normal		Recall Normal Color Temperature from EEPROM.
		Cool		Recall Cool Color Temperature from EEPROM.
		sRGB		Recall SRGB Color Temperature from EEPROM.
		User		Recall User Color Temperature from EEPROM
	DCB Mode	Full Enhance	ON/OFF	Disable or Enable Full Enhance Mode.
		Nature Skin	ON/OFF	Disable or Enable Nature Skin Mode.
		Green Field	ON/OFF	Disable or Enable Green Field Mode.
		Sky-blue	ON/OFF	Disable or Enable Sky-blue Mode.
		AutoDetect	ON/OFF	Disable or Enable AutoDetect Mode.
	DCB Demo		ON/OFF	Disable or Enable Demo.
	Red		0-100	Red gain from Digital-register.
	Green		0-100	Green gain from Digital-register.
	Blue		0-100	Blue gain from Digital-register.
	LowBlue Mode	Multimedia		Decrease blue light wave by controlling color temperature
		Internet		
		Office		
		Reading		
		Off		

Picture Boost

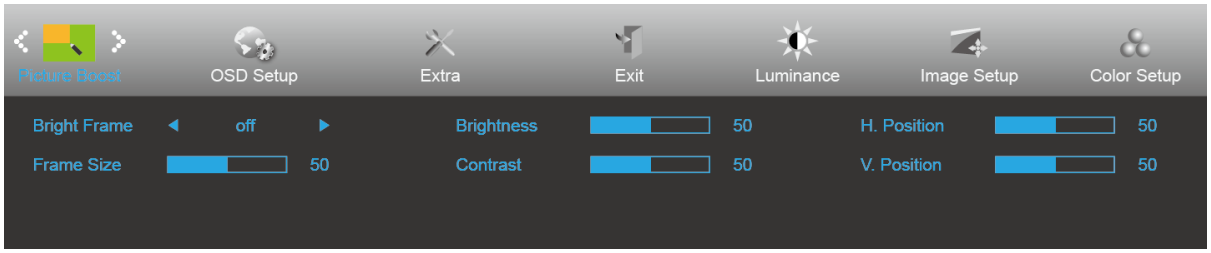

1 Press **MENU** (Menu) to display menu.

2 Press ◀ or ▶ to select (Picture Boost), and press ▼ to enter.

3 Press ◀/▶/▲/▼ to select submenu.

4 Press ◀ or ▶ to adjust.

5 Press ▲ to exit.

	Bright Frame	ON/OFF	Enable/Disable Bright Frame
	Frame Size	14-100	Adjust the Size of the Frame
	Brightness	0-100	Brightness Adjustment for Enhance Area
	Contrast	0-100	Contrast Adjustment for Enhance Area
	H. position	0-100	Adjust the horizontal position of the Frame
	V. position	0-100	Adjust the vertical position of the Frame

Note:

Adjust the brightness, contrast, and position of the Bright Frame for better viewing experience.

OSD Setup

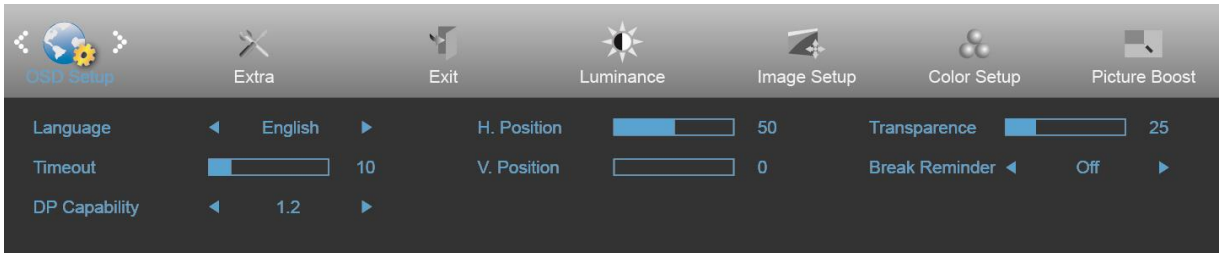

1 Press **MENU** (Menu) to display menu.

2 Press ◀ or ▶ to select (OSD Setup), and press ▼ to enter.

3 Press ◀/▶/▲/▼ to select submenu.

4 Press ◀ or ▶ to adjust.

5 Press ▲ to exit.

	Language		Select the OSD language.
	Timeout	5-120	Adjust the OSD timeout.
	DP Capability	1.1/1.2	If the DP video content supports DP1.2, please select DP1.2 for DP Capability; otherwise, please select DP1.1.
	H. Position	0-100	Adjust the horizontal position of the OSD.
	V. Position	0-100	Adjust the vertical position of the OSD.
	Transparence	0-100	Adjust the OSD transparence
	Break Reminder	on or off	Break reminder if the user continuously work for more than 1hrs.

Extra

1 Press **MENU** (Menu) to display menu.

2 Press ◀ or ▶ to select (Extra), and press ▼ to enter.

3 Press ◀/▶/▲/▼ to select submenu.

4 Press ◀ or ▶ to adjust.

5 Press ▲ to exit.

	Input Select	Auto/HDMI1/HDMI2/DP	Select input signal source.
	Auto Config.	Yes / No	Auto adjust.the picture to default.
	Off Timer	0-24 hrs	Select DC off time.
	Image Ratio	Wide	Select wide format for display.
		4:3	4:3
		1:1	Native resolution
		Movie 1	over scan: Top 9% ; Down 9%
		Movie 2	over scan: Top 9% ; Down 17%.
	DDC/CI	Yes / No	Turn on or off DDC/CI Support.
	Reset	Yes / No	Reset the menu to default.

Note:

1. movie1 and movie2 only support digital source.
2. movie1 and movie2 only support Video Timing(example:480I,480P,576I,576P,720P,1080i,1080P)

Exit

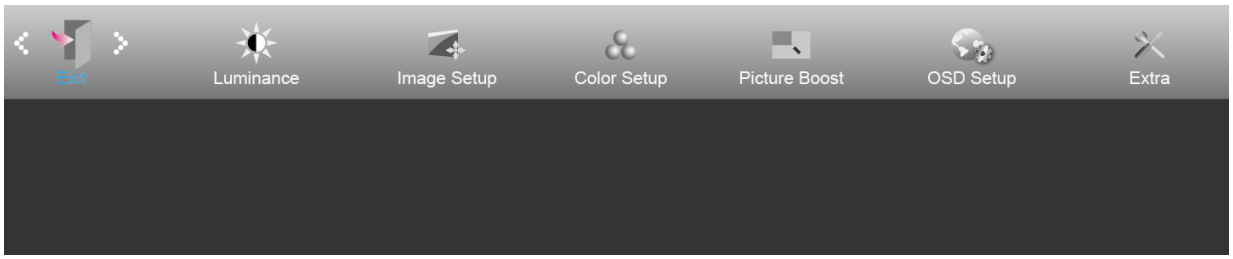

1 Press **MENU** (Menu) to display menu.

2 Press ◀ or ▶ to select (Exit), and press ▼ to enter.

3 Press ▲ to exit.

LED Indicator

Status	LED Color
Full Power Mode	White
Power Saving	Orange

Driver

i-Menu

Welcome to “i-Menu” software by AOC. i-Menu makes it easy to adjust your monitor display setting by using on screen menus instead of the OSD button on the monitor. To complete installation, please follow the installation guide.

e-Saver

Welcome to use AOC e-Saver monitor power management software! The AOC e-Saver features Smart Shutdown functions for your monitors, allows your monitor to timely shutdown when PC unit is at any status (On, Off, Sleep or Screen Saver); the actual shutdown time depends on your preferences (see example below).
Please click on "driver/e-Saver/setup.exe" to start installing the e-Saver software, follow the install wizard to complete software installation.

Under each of the four PC statuses, you may choose the desired time (in minutes) from the pull-down menu for your monitor to automatically shutdown. The example below illustrated:
1) The monitor will never shutdown when the PC is powered on.
2) The monitor will automatically shutdown 5 minutes after the PC is powered off.
3) The monitor will automatically shutdown 10 minutes after the PC is in sleep/stand-by mode.
4) The monitor will automatically shutdown 20 minutes after the screen saver appears.

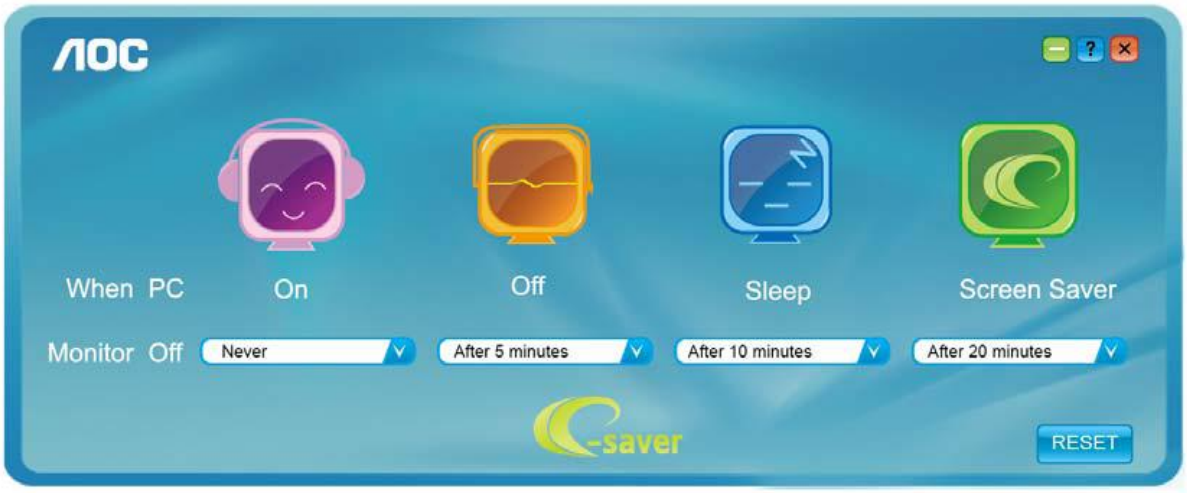

You can click “RESET” to set the e-Saver to its default settings like below.

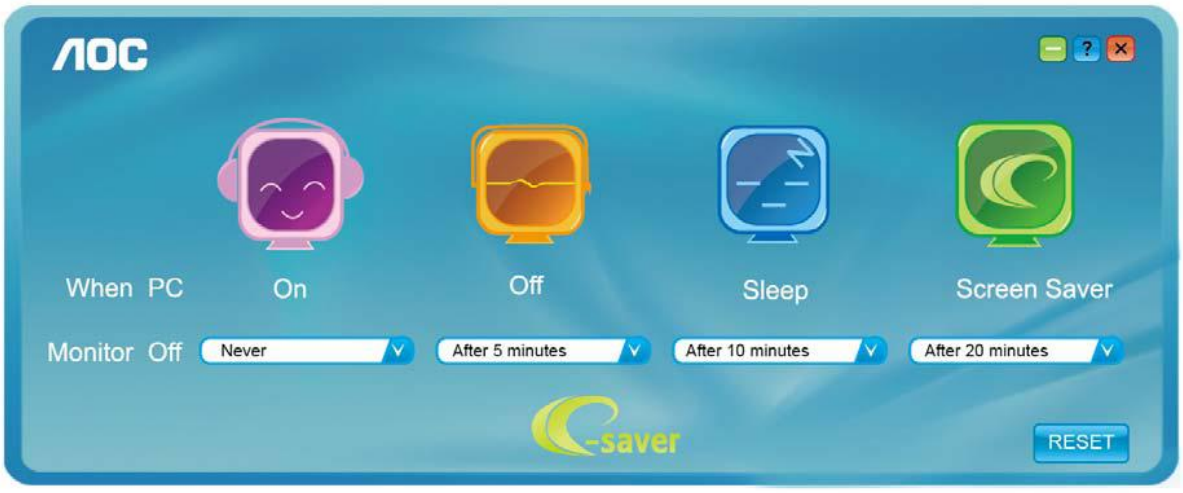

Screen+

Welcome to "Screen+" software by AOC. Screen+ software is a desktop screen splitting tool; it splits the desktop into different panels, and each panel displays a different window. You only need to drag the window to a corresponding panel when you want to access it. It supports multiple monitor display to make your task easier. Please follow the installation software to install it.

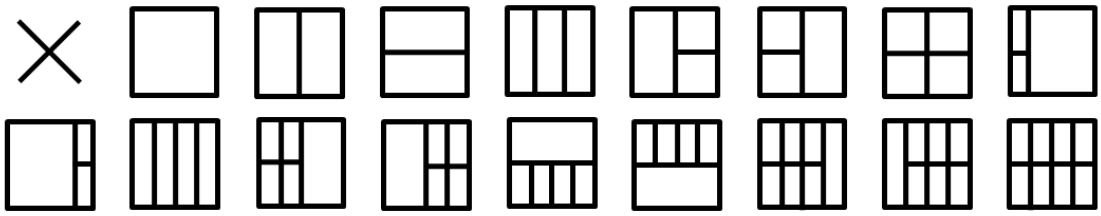

Troubleshoot

Problem & Question	Possible Solutions
Power LED Is Not ON	Make sure the power button is ON and the Power Cord is properly connected to a grounded power outlet and to the monitor.
No images on the screen	● Is the power cord connected properly? Check the power cord connection and power supply. ● Is the cable connected correctly? (Connected using the HDMI cable) Check the HDMI cable connection. (Connected using the DP cable) Check the DP cable connection. *HDMI/ DP input is not available on every model. ● If the power is on, reboot the computer to see the initial screen (the login screen), which can be seen. If the initial screen (the login screen) appears, boot the computer in the applicable mode (the safe mode for Windows 7/8/8.1/10) and then change the frequency of the video card. (Refer to the Setting the Optimal Resolution) If the initial screen (the login screen) does not appear, contact the Service Center or your dealer. ● Can you see "Input Not Supported" on the screen? You can see this message when the signal from the video card exceeds the maximum resolution and frequency that the monitor can handle properly. Adjust the maximum resolution and frequency that the monitor can handle properly. ● Make sure the AOC Monitor Drivers are installed.
Picture Is Fuzzy & Has Ghosting Shadowing Problem	Adjust the Contrast and Brightness Controls. Press to auto adjust. Make sure you are not using an extension cable or switch box. We recommend plugging the monitor directly to the video card output connector on the back.
Picture Bounces, Flickers Or Wave Pattern Appears In The Picture	Move electrical devices that may cause electrical interference as far away from the monitor as possible. Use the maximum refresh rate your monitor is capable of at the resolution you are using.

Monitor Is Stuck In Active Off-Mode"	The Computer Power Switch should be in the ON position. The Computer Video Card should be snugly fitted in its slot. Make sure the monitor's video cable is properly connected to the computer. Inspect the monitor's video cable and make sure no pin is bent. Make sure your computer is operational by hitting the CAPS LOCK key on the keyboard while observing the CAPS LOCK LED. The LED should either turn ON or OFF after hitting the CAPS LOCK key.
Missing one of the primary colors (RED, GREEN, or BLUE)	Inspect the monitor's video cable and make sure that no pin is damaged. Make sure the monitor's video cable is properly connected to the computer.
Screen image is not centered or sized properly	Adjust H-Position and V-Position or press hot-key (AUTO).
Picture has color defects (white does not look white)	Adjust RGB color or select desired color temperature.
Horizontal or vertical disturbances on the screen	Use Windows 7/8/8.1/10 shut-down mode to adjust CLOCK and PHASE. Press to auto-adjust.

Specification

General Specification

Panel	Model name	U2790PQU	
	Driving system	TFT Color LCD	
	Viewable Image Size	27.0 inch, 68.47cm diagonal	
	Pixel pitch	0.1554(H)mm x 0.1554(V)mm	
	Video	HDMI Interface & DP Interface	
	Separate Sync.	H/V TTL	
	Display Color	1.07B Colors	
Others	Horizontal scan range	30k ~ 99kHz(HDMI2) 30k ~ 160kHz(HDMI1、DP)	
	Horizontal scan Size(Maximum)	596.736mm	
	Vertical scan range	23Hz ~ 80Hz	
	Vertical scan Size(Maximum)	335.664mm	
	Optimal preset resolution	3840x2160@30Hz(HDMI2) 3840x2160@60Hz(HDMI1、DP)	
	Plug & Play	VESA DDC2B/CI	
	Input Connector	DP / HDMIx2 / USBx2 / Earphone	
	Power Source	100-240V～,50/60Hz	
	Power Consumption	Typical (Brightness = 90,Contrast = 50)	35W
		(Brightness = 100,Contrast = 100)	≤ 65W
		Power saving	≤0.5W
	Off timer	0-24 hrs	
Physical Characteristics	Connector Type	DP / HDMI / USB / Earphone out	
	Signal Cable Type	Detachable	
Environmental	Temperature:	Operating	0° to 40°C
		Non-Operating	-25° to 55°C
	Humidity:	Operating	10% to 85% (non-condensing)
		Non-Operating	5% to 93% (non-condensing)
	Altitude:	Operating	0~ 5000m(0~ 16404 ft)
		Non-Operating	0~ 12192m (0~ 40000 ft)

Preset Display Modes

Standard	Resolution	H. Frequency (kHz)	V. Frequency (Hz)
VGA	640x480@60Hz	31.469	59.940
	640x480@72Hz	37.861	72.809
	640x480@75Hz	37.500	75.00
SVGA	800x600@56Hz	35.156	56.250
	800x600@60Hz	37.879	60.317
	800x600@72Hz	48.077	72.188
	800x600@75Hz	46.875	75.000
XGA	1024x768@60Hz	48.363	60.004
	1024x768@70Hz	56.476	70.069
	1024x768@75Hz	60.023	75.029
SXGA	1280x1024@60Hz	63.981	60.020
	1280x1024@75Hz	79.976	75.025
WXGA+	1440x900@60Hz	55.935	59.887
	1440x900@60Hz	55.469	59.901
WSXGA	1680x1050@60Hz	65.290	59.954
	1680x1050@60Hz	64.674	59.883
FHD	1920x1080@60Hz	67.500	60.000
***	1152x864@75Hz	67.500	75.000
	1280x960@60Hz	60.000	60.000
QHD	2560x1440@60Hz	88.787	59.951
UHD	3840x2160@30Hz	67.500	30
UHD	3840x2160@60Hz	135.00	60
IBM MODES			
DOS	640x350@70Hz	31.469	70.087
DOS	720x400@70Hz	31.469	70.087
MAC MODES			
VGA	640x480@67Hz	35.000	66.667
SVGA	832x624@75Hz	49.725	74.551
XGA	1024x768@75Hz	60.241	74.927

Pin Assignments

19-Pin Color Display Signal Cable

Pin No.	Signal Name	Pin No.	Signal Name
1	TMDS Data 2+	11	TMDS Clock Shield
2	TMDS Data 2 Shield	12	TMDS Clock
3	TMDS Data 2	13	CEC
4	TMDS Data 1+	14	Reserved (N.C. on device
5	TMDS Data 1Shield	15	SCL
6	TMDS Data 1	16	SDA
7	TMDS Data 0+	17	DDC/CEC Ground
8	TMDS Data 0 Shield	18	+5V Power
9	TMDS Data 0	19	Hot Plug Detect
10	TMDS Clock +		

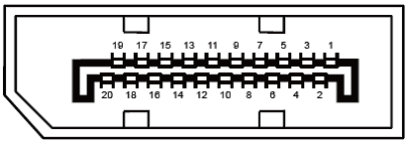

20-Pin Color Display Signal Cable

Pin No.	Signal Name	Pin No.	Signal Name
1	ML Lane 3(n)	11	GND
2	GND	12	ML Lane 0(p)
3	ML Lane 3(p)	13	CONFIG1
4	ML Lane 2(n)	14	CONFIG2
5	GND	15	AUX CH(p)
6	ML Lane 2(p)	16	GND
7	ML Lane 1(n)	17	AUX CH(n)
8	GND	18	Hot Plug Detect
9	ML Lane 1(p)	19	Return OP PWR
10	ML Lane 0(n)	20	DP PWR

Plug and Play

Plug & Play DDC2B Feature

This monitor is equipped with VESA DDC2B capabilities according to the VESA DDC STANDARD. It allows the monitor to inform the host system of its identity and, depending on the level of DDC used, communicate additional information about its display capabilities.

The DDC2B is a bi-directional data channel based on the I2C protocol. The host can request EDID information over the DDC2B channel.