TÜV Rheinland (China) Ltd.
Member of TÜV Rheinland Group

TÜVRheinland®
Precisely Right.

TPV Electronics (Fujian) Co., Ltd.
Mr. Xinliang Wu
RD-SE
Rongqiao Economic and
Technological Development Zone
Fuqing City, Fujian Province
P.R. China

Date : 18.01.2016
Our ref. : WangAn ZJ
Your ref.: 1140023533

Ref : CB Certificate Japan

Type of Equipment : LCD MONITOR
Model Designation : See Certificate
Certificate No. : JPTUV-067398-M1
Report No. : 17051179 002

Dear Mr. Xinliang Wu,

Thank you very much for your interest in our services.

Please find enclosed your certification documents.

We appreciate your support and would like to offer our assistance in the approval of your future products through our extensive range of technical services.

Please feel free to contact us whatever your requirements may be.

With kind regards,

Certification Body

Ing. M. Eichenseder

Enclosure

TÜV Rheinland (China) Ltd.
莱茵检测认证服务（中国）有限公司

Unit 707, AVIC Bldg., No. 10B, Central Road, East 3rd Ring Road, Chaoyang District, Beijing, 100022, P.R.China

北京市朝阳区东三环中路乙10号
艾维克大厦707室
邮编：100022

Tel: (8610)6566 6660
Fax: (8610)6566 6667
e-mail: info@bj.chn.tuv.com
Internet: http://www.chn.tuv.com

IEC IECEE CB SCHEME

Ref. Certif. No.

JPTUV-067398-M1

IEC SYSTEM FOR MUTUAL RECOGNITION OF TEST CERTIFICATES FOR ELECTRICAL EQUIPMENT (IECEE) CB SCHEME

SYSTEME CEI D'ACCEPTATION MUTUELLE DE CERTIFICATS D ESSAIS DES EQUIPEMENTS ELECTRIQUES (IECEE) METHODE OC

CB TEST CERTIFICATE

CERTIFICAT D'ESSAI OC

Product Produit	LCD MONITOR
Name and address of the applicant Nom et adresse du demandeur	TPV Electronics (Fujian) Co., Ltd. Rongqiao Economic and Technological Development Zone, Fuqing City, Fujian Province, P.R. China
Name and address of the manufacturer Nom et adresse du fabricant	TPV Electronics (Fujian) Co., Ltd. Rongqiao Economic and Technological Development Zone, Fuqing City, Fujian Province, P.R. China
Name and address of the factory Nom et adresse de l'usine	See additional page(s)
Ratings and principal characteristics Valeurs nominales et charactéristiques principales	AC 100-240V; 50/60Hz; 1.5A; Class I
Trademark (if any) Marque de fabrique (si elle existe)	AOC
Type of Manufacturer's Testing Laboratories used Type de programme du laboratoire d'essais constructeur	N/A
Model / Type Ref. Ref. de type	270LM000**, *2775********, *277*********; 236LM000**, *2475********, *247********* (* = 0-9, A-Z, a-z, -, \, /, + or blank)
Additional information (if necessary may also be reported on page 2) Les informations complémentaires (si nécessaire, peuvent être indiqués sur la 2ème page)	For model difference, refer to the test report. Re-issue of JPTUV-067398 dated 12.11.2015, due to first modification.
A sample of the product was tested and found to be in conformity with Un échantillon de ce produit a été essayé et a été considéré conforme à la	IEC 60950-1:2005+A1+A2 National differences see test report
As shown in the Test Report Ref. No. which forms part of this Certificate Comme indiqué dans le Rapport d'essais numéro de référence qui constitue partie de ce Certificat	17051179 002

This CB Test Certificate is issued by the National Certification Body
Ce Certificat d'essai OC est établi par l'Organisme National de Certification

TÜVRheinland®

TÜV Rheinland Japan Ltd.
Global Technology Assessment Center
4-25-2 Kita-Yamata, Tsuzuki-ku
Yokohama 224-0021 Japan
Phone + 81 45 914-3888
Fax + 81 45 914-3354
Mail: info@jpn.tuv.com
Web: www.tuv.com

Date: 18.01.2016

Signature: Ing. M. Eichenseder

1. TPV Display Technology (Wuhan)
   Co., Ltd.
   Unique No. 11, Zhuankou Development
   District of Economic Technological
   Development Zone, Wuhan City 430056, P.R. China

2. TPV Electronics (Fujian) Co., Ltd.
   Shangzheng, Yuan Hong Road
   Fuqing City, Fujian Province
   P.R. China

3. Envision Industry of Electronic
   Products Ltd.
   Rodovia Anhanguera S/N-KM 49
   Tijuco Preto-Jundiaí-SP-
   13.205-700, Brazil

4. L&T Display Technology (Fujian) Ltd.
   Optoelectronic Park, Rongqiao
   Economic and Technological
   Development Zone
   Fuqing, Fujian 350301, P.R. China

5. TPV Electronics (Fujian) Co., Ltd.
   Rongqiao Economic and
   Technological Development Zone
   Fuqing City, Fujian Province
   P.R. China

6. Trend Smart CE Mexico S de RL de CV
   Avenida Sor Juana Ines de la Cruz
   de 19602 Nueva Tijuana,
   22435 Tijuana Baja California
   MEXICO

7. TPV Display Technology (Beihai)
   Co., Ltd.
   China Electronic Beihai Industry
   Park, Northeast of the Crossing
   Between Taiwan Road and Jilin Road, Beihai City, Guangxi, P.R. China

8. TPV Technology (Qingdao)
   Co., Ltd.
   No.99 Huoju Road, High-tech
   Industrial Development Zone
   Qingdao City, Shandong Province, P.R. China

9. TPV Display Technology (China)
   Co., Ltd.
   No. 106 Jinghai 3 Rd., BDA
   Beijing City 100176
   P.R. China

Additional information (if necessary)
Information complémentaire (si nécessaire)

Report Ref. No.: 17051179 002

Date: 18.01.2016

Signature: Ing. M. Eichenseder

10. Hefei Huntkey Display Technology
Co., Ltd.
South Jinxiu Road, East Qingtan Road
Economic And Technological
Development Zone, Hefei, Anhui 230601, P.R. China

11. TPV Electronics (Fujian) Co., Ltd.
Optoelectronic Park,
Rongqiao Economic and
Technological Development Zone,
Fuqing City, Fujian Province 350301, P.R. China

Additional information (if necessary)
Information complémentaire (si nécessaire)

Report Ref. No.: 17051179 002

Date: 18.01.2016

Signature: Ing. M. Eichenseder

Test Report issued under the responsibility of:

TÜVRheinland®

TEST REPORT

IEC 60950-1
Information technology equipment – Safety – Part 1: General requirements

Report Number. ..... : 17051179 002

Date of issue ..... : Jan. 14. 2016

Total number of pages..... 45

Applicant's name..... : **TPV Electronics (Fujian) Co., Ltd.**

Address ..... : Rongqiao Economic and Technological Development Zone, Fuqing City, Fujian Province, P.R.China

Test specification:

Standard..... : IEC 60950-1:2005 (Second Edition) + Am 1:2009 + Am 2:2013

Test procedure ..... : CB Scheme

Non-standard test method ..... : N/A

Test Report Form No. ..... : IEC60950_1F

Test Report Form(s) Originator .... : SGS Fimko Ltd

Master TRF..... : Dated 2014-02

If this Test Report Form is used by non-IECEE members, the IECEE/IEC logo and the reference to the CB Scheme procedure shall be removed.

This report is not valid as a CB Test Report unless signed by an approved CB Testing Laboratory and appended to a CB Test Certificate issued by an NCB in accordance with IECEE 02.

General disclaimer:

The test results presented in this report relate only to the object tested.
This report shall not be reproduced, except in full, without the written approval of the Issuing CB Testing Laboratory. The authenticity of this Test Report and its contents can be verified by contacting the NCB, responsible for this Test Report.

Test item description ..... : LCD MONITOR

Trade Mark ..... : AOC

Manufacturer..... : Same as applicant.

Model/Type reference ..... : 270LM000**, *2775********, ***277*********; **236LM000**, *2475********, ***247*********** (* can be A-Z, a-z, 0-9, +, -, /, \ or blank, for marketing use only; No constructional differences. Models differ only in model name and marking label)

Ratings ..... : I/P: 100-240Vac, 50/60Hz, 1.5A

Testing procedure and testing location:		
☒	**CB Testing Laboratory:**	**TÜV Rheinland (Shenzhen) Co., Ltd.**
Testing location/ address .....:		East of F/1, F/2~F/4, Building 1, Cybio Technology Building No. 6 Langshan No.2 Road, North Hi-tech Industry Park 518057 Shenzhen Nanshan District CHINA
☐	**Associated CB Testing Laboratory:**	
Testing location/ address .....:		
Tested by (name + signature).....:	Anderson Wang	
Approved by (name + signature).....:	Steven Lin	
☐	**Testing procedure: TMP/CTF Stage 1:**	
Testing location/ address .....:		
Tested by (name + signature).....:		
Approved by (name + signature).....:		
☐	**Testing procedure: WMT/CTF Stage 2:**	
Testing location/ address .....:		
Tested by (name + signature).....:		
Witnessed by (name + signature) .....:		
Approved by (name + signature).....:		
☐	**Testing procedure: SMT/CTF Stage 3 or 4:**	
Testing location/ address .....:		
Tested by (name + signature).....:		
Witnessed by (name + signature) .....:		
Approved by (name + signature).....:		
Supervised by (name + signature).....:		

List of Attachments (including a total number of pages in each attachment):

- Photo documentation

Total number of pages in each attachment is indicated in individual attachment.

Summary of testing:

Tests performed (name of test and test clause):

1. Following tests performed during evaluation

name of test	test clause number
Input Current Test	1.6.2
Energy hazard in Operator Access Area	2.1.1.5
Discharge of Capacitors	2.1.1.7
SELV limits for Normal Conditions	2.2.2
SELV limits for Abnormal Conditions	2.2.3
Limited current circuits	2.4
Limited power source	2.5
Resistance of Earthing Circuit	2.6.3.4
Humidity Conditioning	2.9.2
Working Voltage over Insulation	2.10.2
Clearance and creepage distance measurements	2.10.3 & 2.10.4
Stability test	4.1
Steady force test, 10 N	4.2.2
Steady Force Test, 30N	4.2.3
Steady Force Test, 250N	4.2.4
Impact Test (Steel Ball)	4.2.5
Stress Relief Test	4.2.7
Wall or ceiling mounted	4.2.10
Maximum Temperature Test	4.5.2
Ball pressure test	4.5.5
Openings in enclosures	4.6
Touch Current and PE current	5.1.6
Electric Strength Test	5.2
Fault Condition Test	5.3

The EUT passed the test.

Testing location:

All tests as described in Test Case and Measurement Sections were performed at the laboratory described on page 2

Summary of compliance with National Differences

See original CB report 17051179 001.

Copy of marking plate

The artwork below may be only a draft. The use of certification marks on a product must be authorized by the respective NCBs that own these marks.

AOC LCD MONITOR/液晶顯示器/모니터

Product Name/Nama Produk/機種名/제품명: E2475SWJ
Model No./型號/모델명: 236LM00031
Power Rating/Tegangan/額定電源/정격입력:100-240V～ 50/60Hz 1.5A
제조국:중국/中國製造/Made In China/Buatan China
www.aoc.com Q40G024N-615-75A

CAN ICES-3(B)/NMB-3(B)
Laite on liitettävä suojakoskettimilla varustettuun pistorasiaan
Apparatet må tilkoples jordet stikkontakt
Apparaten skall anslutas till jordat uttag
Apparatets stikprop skal tilsluttes en stikkontakt med jord, som giver forbindelse til stikproppens jord

BARCODE

Warning: Shock Hazard, Do Not Open.
高壓注意：非專業維修人員請勿打開後蓋。
警語：使用過度恐傷害視力
Rongqiao Economic and Technological Development Zone, Fuqing City, Fujian Province, P.R.China
福建捷聯電子有限公司
福建省福清市融僑經濟技術開發區
판매원:(주)알파스캔디스플레이
수입원 : COMPOINT CO., LTD.
상호명: TPV Electronics(Fujian) Co., Ltd.
제조A/S 문의처:1544-7739 Q40G024N-615-76A

ZU10322-15018
MSIP-REM-TPF-236LM00031
R33037
AOC International
Europe B.V. Amstelgebouw,
6th floor Prins Bernhardplein
200 1097 JB Amsterdam
The Netherlands
SAFETY MARK 151661-12

AOC LCD MONITOR/液晶显示器/液晶顯示器/모니터

Product Name/Nama Produk/机种名/機種名/모델명: Q2775PQU
Model No. 型号/型號/모델명: 270LM00023
Power Rating/Tegangan/額定电源/額定電源/정격입력: 100-240V～ 50/60Hz 1.5A
Q40G027N-615-49A

CAN ICES-3(B)/NMB-3(B)
Laite on liitettävä suojakoskettimilla varustettuun pistorasiaan
Apparatet må tilkoples jordet stikkontakt
Apparaten skall anslutas till jordat uttag
Apparatets stikprop skal tilsluttes en stikkontakt med jord, som giver forbindelse til stikproppens jord

BARCODE

Warning: Shock Hazard, Do Not Open.
高压注意：非专业维修人员请勿打开后盖。
高壓注意：非專業維修人員請勿打開後蓋。
警語：使用過度恐傷害視力
제조업체명/상호명：TPV Electronics(Fujian) Co., Ltd.
Rongqiao Economic and Technological Development Zone, Fuqing City, Fujian Province, P.R.China
판매원 : ㈜알파스캔디스플레이 제조A/S 문의처：1544-7739
福建捷联电子有限公司 福建省福清市融侨经济技术开发区
福建捷聯電子有限公司 福建省福清市融僑經濟技術開發區
Q40G027N-615-50A

SAFETY MARK
MSIP-REM-TPF-270LM00023
R33037
AOC International
Europe B.V. Amstelgebouw,
6th floor Prins Bernhardplein
200 1097 JB Amsterdam
The Netherlands
www.aoc.com
Made in China/Buatan China
제조국:중국/中国制造/中國製造

Test item particulars.....:	
Equipment mobility.....:	[x] movable (for unit with base stand) [] hand-held [] transportable [x] stationary (for unit without base stand) [] for building-in [] direct plug-in
Connection to the mains.....:	[x] pluggable equipment [x] type A [] type B [] permanent connection [x] detachable power supply cord [] non-detachable power supply cord [] not directly connected to the mains
Operating condition.....:	[x] continuous [] rated operating / resting time:
Access location .....:	[x] operator accessible [] restricted access location
Over voltage category (OVC) .....:	[] OVC I [x] OVC II [] OVC III [] OVC IV [] other:
Mains supply tolerance (%) or absolute mains supply values .....:	±10% according to client's request
Tested for IT power systems .....:	[] Yes [x] No
IT testing, phase-phase voltage (V) .....:	
Class of equipment .....:	[x] Class I [] Class II [] Class III [] Not classified
Considered current rating of protective device as part of the building installation (A) .....:	16A (20A for North America)
Pollution degree (PD) .....:	[] PD 1 [x] PD 2 [] PD 3
IP protection class .....:	IP20
Altitude during operation (m) .....:	≤5000
Altitude of test laboratory (m) .....:	<2000
Mass of equipment (kg) .....:	For 27 models without base: 4.21kg; For 23.6 models without base: 3.15kg; base type A: 3.59kg; base type B: 0.46kg; base type A': 2.01kg; base type B': 0.36kg
Possible test case verdicts:	
- test case does not apply to the test object .....:	N/A
- test object does meet the requirement.....:	P (Pass)
- test object does not meet the requirement .....:	F (Fail)
Testing.....:	
Date of receipt of test item.....:	Dec.01.2015
Date(s) of performance of tests .....:	Dec.24.2015 - Jan.11.2016
General remarks:	
"(see Enclosure #)" refers to additional information appended to the report. "(see appended table)" refers to a table appended to the report. **Throughout this report a ☐ comma / ☒ point is used as the decimal separator.**	

Manufacturer's Declaration per sub-clause 4.2.5 of IECEE 02:

The application for obtaining a CB Test Certificate includes more than one factory location and a declaration from the Manufacturer stating that the sample(s) submitted for evaluation is (are) representative of the products from each factory has been provided .....:

☒ **Yes**

☐ **Not applicable**

When differences exist; they shall be identified in the General product information section.

Name and address of factory (ies)..... : See original report 17051179 001 for factory list.

General product information:

Description of change(s):

1. Add new power board: **715G7775** for 27 inch models.
2. Add new main boards: **715G5436** and **715G7612** for 27 inch models, which are used with power board 715G7775 only.
3. Change rating frequency on rating label from "50-60Hz" to "**50/60Hz**" according to client's request. See Page 4 for updated rating label.
4. Change model name "*277***" to "***277*********". No technical difference exists.
5. Add new stationary base named as base **type B** for 27 inch models. Meanwhile, original Height adjustable base stand with rotation function named as **type A**.
6. Update weight of 27 inch models due to typing error in original report 17051179 001. See Page 5 for the details.
7. Add new 23.6 inch models: **236LM000****, ***2475********, ***247*********, which are identical to original model 270LM000**, except for:
   - used with new power board **715G7775** only;
   - used with new main board **715G5436** and **715G7970** only;
   - used with plastic enclosure type A' and metal enclosure type B;
   - used without USB board;
   - used with base type A' and type B'.

For the above described change(s) the following was considered to be necessary :

Change	Testing	Comments
1.-7.	See "**Summary of testing**" on Page 3 for the details.	See following pages for the details.

See below table for differences among the models:

Model name	Panel size	Power board	Plasitc enclosure	Metal enclosure	Main board	USB board	Base
270LM000** *2775******** ***277*********	27 inch	715G7760	Type A	Type A	715G7742 715G7762	715G7743	Type A **Type B**
		715G7775			**715G5436** **715G7612**	**N/A**	
236LM000** ***2475******** ***247*********	23.6 inch	**715G7775**	**Type A'**	**Type B**	**715G5436** **715G7970**	**N/A**	**Type A'** **Type B'**

Supplementary information:

1. Metal enclosure type B is identical to type A except for adding some circle opening near secondary circuit of power board;
2. Plastic enclosure type A is identical to type A' except for dimension due to difference panel size.
3. Base type A', B' are similar to type A, B except for smaller dimension.

Definition of variable(s):

Variable:	Range of variable:	Content:
*	A-Z, a-z, 0-9, +, -, /, \ or blank	For marketing use only; No constructional differences. Models differ only in model name and marking label

Other comments:
Declaration of the manufacturer: the sample(s) submitted for evaluation is (are) representative of the products from each factory.

History of amendments and modifications:
Ref. No. 17051179 001 dated Nov. 10. 2015 (original test report)
Ref. No. 17051179 002 dated Jan. 12. 2016 (modification)

Abbreviations used in the report:

- normal conditions	**N.C.**	- single fault conditions	**S.F.C**
- functional insulation	**OP**	- basic insulation	**BI**
- double insulation	**DI**	- supplementary insulation	**SI**
- between parts of opposite polarity	**BOP**	- reinforced insulation	**RI**

Indicate used abbreviations (if any)

IEC 60950-1			
Clause	Requirement + Test	Result - Remark	Verdict

1	**GENERAL**		**P**

1.5	**Components**		**P**
1.5.1	General		**P**
	Comply with IEC 60950-1 or relevant component standard	(see appended table 1.5.1)	**P**
1.5.2	Evaluation and testing of components	Components which are certified to IEC and/or national standards are used correctly within their ratings. Components not covered by IEC standards are tested under the conditions present in the equipment.	**P**
1.5.3	Thermal controls	No thermal controls.	**N/A**
1.5.4	Transformers	Transformers used are suitable for their intended application and comply with the relevant requirements of the standard and particularly Annex C.	**P**
1.5.5	Interconnecting cables	Interconnecting cable does not carry voltage higher than SELV and no higher energy level than 240VA.	**P**
1.5.6	Capacitors bridging insulation	Between lines: X1 or X2 capacitor according to IEC 60384-14 was used. Between primary and earth: Y1 or Y2 capacitors according to IEC 60384-14 were used. Between primary and secondary: Y1 capacitor according to IEC 60384-14 was used. (see appended table 1.5.1)	**P**
1.5.7	Resistors bridging insulation		**P**
1.5.7.1	Resistors bridging functional, basic or supplementary insulation	Only discharge resistors bridging between L-N (functional)	**P**
1.5.7.2	Resistors bridging double or reinforced insulation between a.c. mains and other circuits		**N/A**
1.5.7.3	Resistors bridging double or reinforced insulation between a.c. mains and antenna or coaxial cable		**N/A**
1.5.8	Components in equipment for IT power systems		**N/A**

IEC 60950-1			
Clause	Requirement + Test	Result - Remark	Verdict
1.5.9	Surge suppressors		**N/A**
1.5.9.1	General		**N/A**
1.5.9.2	Protection of VDRs		**N/A**
1.5.9.3	Bridging of functional insulation by a VDR		**N/A**
1.5.9.4	Bridging of basic insulation by a VDR	No such construction.	**N/A**
1.5.9.5	Bridging of supplementary, double or reinforced insulation by a VDR	No such construction.	**N/A**
1.6	**Power interface**		**P**
1.6.1	AC power distribution systems	TN power system	**P**
1.6.2	Input current	(see appended table 1.6.2)	**P**
1.7	**Marking and instructions**		**P**
1.7.1	Power rating and identification markings	See below.	**P**
1.7.1.1	Power rating marking	See below.	**P**
	Multiple mains supply connections.....:		**N/A**
	Rated voltage(s) or voltage range(s) (V) .....:	See copy of marking plate for details	**P**
	Symbol for nature of supply, for d.c. only .....:	AC source	**N/A**
	Rated frequency or rated frequency range (Hz) ....:	See copy of marking plate for details	**P**
	Rated current (mA or A) .....:	See copy of marking plate for details	**P**
1.7.1.2	Identification markings	See below.	**P**
	Manufacturer's name or trade-mark or identification mark .....:	See copy of marking plate for details	**P**
	Model identification or type reference .....:	See copy of marking plate for details	**P**
	Symbol for Class II equipment only .....:	Class I equipment.	**N/A**
	Other markings and symbols .....:	Additional symbol or marking does not give rise to misunderstanding.	**P**
1.7.1.3	Use of graphical symbols	Graphical symbols used according to IEC 60417 or ISO 3864-2 or ISO 7000.	**P**
1.7.2	Safety instructions and marking	English safety instruction provided.	**P**
1.7.2.1	General		**P**

IEC 60950-1			
Clause	Requirement + Test	Result - Remark	Verdict
1.7.2.2	Disconnect devices	AC inlet serves as disconnect device.	**P**
1.7.2.3	Overcurrent protective device	Not type B pluggable equipment or permanently connected equipment.	**N/A**
1.7.2.4	IT power distribution systems	TN power system.	**N/A**
1.7.2.5	Operator access with a tool	No such access required.	**N/A**
1.7.2.6	Ozone	Ozone not used or generated.	**N/A**
1.7.3	Short duty cycles	Equipment is designed for continuous operation.	**N/A**
1.7.4	Supply voltage adjustment .....:	Single input voltage range without adjustment.	**N/A**
	Methods and means of adjustment; reference to installation instructions .....:		**N/A**
1.7.5	Power outlets on the equipment .....:	No power outlets provided.	**N/A**
1.7.6	Fuse identification (marking, special fusing characteristics, cross-reference) .....:	The fuse marking is marked near fuse on PCB as follow: F9901(on primary): T4AL/250Vac CAUTION: RISK OF FIRE REPLACE ONLY WITH SAME TYPE AND RATING OF FUSE. Build-in fuses F901 (secondary T4AL/250V marked on PCB) and F801 (secondary T2AL/250V marked on PCB). Not located in operator access areas.	**P**
1.7.7	Wiring terminals	See below.	**P**
1.7.7.1	Protective earthing and bonding terminals .....:	AC inlet used. Symbol marked beside earthing pin of AC inlet	**P**

2	**PROTECTION FROM HAZARDS**		**P**
2.1	**Protection from electric shock and energy hazards**		**P**
2.1.1	Protection in operator access areas	Only SELV signal interface accessible by operator.	**P**

IEC 60950-1			
Clause	Requirement + Test	Result - Remark	Verdict
2.1.1.5	Energy hazards .....:	The energy does not exceed 240VA between any two points in accessible connector of secondary circuit. (see appended table 2.1.1.5.)	**P**
2.1.1.7	Discharge of capacitors in equipment	(See appended table 2.1.1.7)	**P**
	Measured voltage (V); time-constant (s) .....:	(See appended table 2.1.1.7)	—
2.2	**SELV circuits**		**P**
2.2.1	General requirements	The secondary circuits were tested as SELV. See sub-clauses 2.2.1 to 2.2.4.	**P**
2.2.2	Voltages under normal conditions (V) .....:	42.4V peak or 60V d.c. are not exceeded in SELV circuit under normal operation.	**P**
2.2.3	Voltages under fault conditions (V) .....:	Single fault did not cause excessive voltage in accessible SELV circuits. Limits of 71V peak and 120V d.c. were not exceeded within 0.2 sec. and limits 42.4V peak and 60V d.c. were not exceeded for longer than 0.2 sec., see appended tables 2.2 and 5.3.	**P**
2.2.4	Connection of SELV circuits to other circuits .....:	See sub-clauses 2.2.2 and 2.2.3. No direct connection between SELV and any primary circuits.	**P**
2.4	**Limited current circuits**		P
2.4.1	General requirements	Primary and secondary circuits bridged by Y1 type capacitor C9904. The pin connected with secondary circuits was disconnected and the measuring instrument of Figure D.1 in Annex D was connected between secondary pin and earth during the test.	P
2.4.2	Limit values	(see appended table 2.4.2)	P
	Frequency (Hz) .....:		—
	Measured current (mA).....:		—

IEC 60950-1			
Clause	Requirement + Test	Result - Remark	Verdict
	Measured voltage (V) .....:		—
	Measured circuit capacitance (nF or μF).....:		—
2.4.3	Connection of limited current circuits to other circuits	Only intended to be connected with SELV circuits.	P
2.5	**Limited power sources**		**P**
	a) Inherently limited output		**N/A**
	b) Impedance limited output		**N/A**
	c) Regulating network limited output under normal operating and single fault condition		**N/A**
	d) Overcurrent protective device limited output	(see appended table 2.5)	**P**
	Max. output voltage (V), max. output current (A), max. apparent power (VA).....:	(see appended table 2.5)	—
	Current rating of overcurrent protective device (A) .:	See Table 1.5.1	—
	Use of integrated circuit (IC) current limiters		—
2.6	**Provisions for earthing and bonding**		**P**
2.6.1	Protective earthing	Class I appliance inlet terminal provided as protective earthing terminal, and accessible metal plate is connected to earthed metal fire enclosure. The test of 2.6.3.4 complied.	**P**
2.6.2	Functional earthing	Functional earthing in the secondary circuit is accessible at the VGA connector and separated from the primary by reinforced insulation.	**P**
	Use of symbol for functional earthing .....:		**N/A**
2.6.3	Protective earthing and protective bonding conductors		**P**
2.6.3.1	General	Appliance inlet used. No power cord provided with the unit.	**P**
2.6.3.2	Size of protective earthing conductors	AC inlet used	**N/A**
	Rated current (A), cross-sectional area (mm^2), AWG .....:		—
2.6.3.3	Size of protective bonding conductors	Screws fixing earthed PCB trace to metal chassis for protective bonding.	**P**
	Rated current (A), cross-sectional area (mm^2), AWG .....:	Refer to test of appended table 2.6.3.4 only.	—

IEC 60950-1			
Clause	Requirement + Test	Result - Remark	Verdict
	Protective current rating (A), cross-sectional area (mm^2), AWG .....:	Refer to test of appended table 2.6.3.4 only.	
2.6.3.4	Resistance of earthing conductors and their terminations; resistance (Ω), voltage drop (V), test current (A), duration (min) .....:	(see appended table 2.6.3.4)	**P**
2.6.3.5	Colour of insulation .....:	Protective bonding conductor as in 2.6.3 and assembled by printed wiring on power board.	**N/A**
2.6.4	Terminals	See below	**P**
2.6.4.1	General		**P**
2.6.4.2	Protective earthing and bonding terminals	The earth terminal of the approved appliance inlet is considered as protective earthing terminal and was evaluated by sub clause 2.6.3.4.	**P**
	Rated current (A), type, nominal thread diameter (mm) .....:	Evaluation by test. See sub-clause 2.6.3.4.	—
2.6.4.3	Separation of the protective earthing conductor from protective bonding conductors	Separated PE and protective bonding conductor used.	**P**
2.6.5	Integrity of protective earthing	See below	**P**
2.6.5.1	Interconnection of equipment	Not depending on interconnection for protective earthing.	**P**
2.6.5.2	Components in protective earthing conductors and protective bonding conductors	No switch or overcurrent protective device in protective earthing or bonding conductor	**P**
2.6.5.3	Disconnection of protective earth	Appliance inlet used for disconnection of protective earth.	**P**
2.6.5.4	Parts that can be removed by an operator	AC inlet with PE terminal used.	**P**
2.6.5.5	Parts removed during servicing		**N/A**
2.6.5.6	Corrosion resistance	All safety earthing connections comply with Annex J.	**P**
2.6.5.7	Screws for protective bonding	No self-tapping or spaced thread screws are used. For the earth connection to the metal chassis a spring washer and a screw are used.	**N/A**
2.6.5.8	Reliance on telecommunication network or cable distribution system	No TNV circuit.	**N/A**

2.9	**Electrical insulation**	**P**

IEC 60950-1			
Clause	Requirement + Test	Result - Remark	Verdict
2.9.1	Properties of insulating materials	Natural rubber, asbestos or hygroscopic material not used.	**P**
2.9.2	Humidity conditioning	Performed at 40°C, 95% R.H. for 120h by client's request.	**P**
	Relative humidity (%), temperature (°C) ..... :	See above.	—
2.9.3	Grade of insulation	See above.	**P**
2.9.4	Separation from hazardous voltages	The adequate levels of safety insulation provided and maintained to comply with the requirements of this standard.	**P**
	Method(s) used ..... :	SELV separated from primary by reinforced or double insulation.	—
2.10	**Clearances, creepage distances and distances through insulation**		**P**
2.10.1	General	See sub-clauses 2.10.3, 2.10.4 and 2.10.5.	**P**
2.10.1.1	Frequency .....:	Considered	**P**
2.10.1.2	Pollution degrees .....:	2	**P**
2.10.1.3	Reduced values for functional insulation	Considered	**P**
2.10.1.4	Intervening unconnected conductive parts	Considered	**P**
2.10.1.5	Insulation with varying dimensions	Insulation kept homogenous.	**N/A**
2.10.1.6	Special separation requirements	Not applied.	**N/A**
2.10.1.7	Insulation in circuits generating starting pulses	No such circuits.	**N/A**
2.10.2	Determination of working voltage		**P**
2.10.2.1	General	The rms and the peak voltage were measured with unit connected to a 240V TN power system. The input neutral and secondary ground were connected during measurement. Pollution Degree 2 and Overvoltage Category II considered.	**P**
2.10.2.2	RMS working voltage	See table 2.10.2	**P**
2.10.2.3	Peak working voltage	See table 2.10.2	**P**
2.10.3	Clearances	See below and advantage of annex G is not considered.	**P**
2.10.3.1	General	Considered.	**P**
2.10.3.2	Mains transient voltages		**P**

IEC 60950-1			
Clause	Requirement + Test	Result - Remark	Verdict
	a) AC mains supply .....:	240V a.c. and Overvoltage Category II	**P**
	b) Earthed d.c. mains supplies .....:		**N/A**
	c) Unearthed d.c. mains supplies .....:		**N/A**
	d) Battery operation .....:		**N/A**
2.10.3.3	Clearances in primary circuits	(see appended table 2.10.3 and 2.10.4)	**P**
2.10.3.4	Clearances in secondary circuits	Sub-clause 5.3.4 considered.	**P**
2.10.3.5	Clearances in circuits having starting pulses		**N/A**
2.10.3.6	Transients from a.c. mains supply .....:	Normal transient voltage considered (overvoltage category II for primary circuit).	**N/A**
2.10.3.7	Transients from d.c. mains supply .....:		**N/A**
2.10.3.8	Transients from telecommunication networks and cable distribution systems .....:		**N/A**
2.10.3.9	Measurement of transient voltage levels		**N/A**
	a) Transients from a mains supply		**N/A**
	For an a.c. mains supply .....:		**N/A**
	For a d.c. mains supply .....:		**N/A**
	b) Transients from a telecommunication network :		**N/A**
2.10.4	Creepage distances		**P**
2.10.4.1	General		**P**
2.10.4.2	Material group and comparative tracking index		**P**
	CTI tests .....:	Material group IIIb is assumed to be used.	—
2.10.4.3	Minimum creepage distances	(see appended table 2.10.3 and 2.10.4)	**P**
2.10.5	Solid insulation		**P**
2.10.5.1	General		**P**
2.10.5.2	Distances through insulation	(see appended table 2.10.5)	**P**
2.10.5.3	Insulating compound as solid insulation	Only inside approved optocoupler.	**N/A**
2.10.5.4	Semiconductor devices	Approved optocoupler complies to IEC 60747-5-2 and having dti. 0.4mm.	**P**
2.10.5.5.	Cemented joints	Not applied.	**N/A**
2.10.5.6	Thin sheet material – General		**N/A**
2.10.5.7	Separable thin sheet material	Used in transformer T901.	**P**

IEC 60950-1			
Clause	Requirement + Test	Result - Remark	Verdict
	Number of layers (pcs) .....:	3 layers for reinforced insulation.	—
2.10.5.8	Non-separable thin sheet material	Not applied for.	**N/A**
2.10.5.9	Thin sheet material – standard test procedure		**N/A**
	Electric strength test		—
2.10.5.10	Thin sheet material – alternative test procedure		**P**
	Electric strength test	(see appended table 5.2)	—
2.10.5.11	Insulation in wound components	Approved triple insulated wire used for secondary windings of T901.	P
2.10.5.12	Wire in wound components		P
	Working voltage .....:	>71Vpeak.	P
	a) Basic insulation not under stress .....:		N/A
	b) Basic, supplementary, reinforced insulation .....:		N/A
	c) Compliance with Annex U .....:	Approved triple insulated wire used.	P
	Two wires in contact inside wound component; angle between 45° and 90° .....:	Physical separation provided by teflon tube and insulation type to relieve mechanical stress at the crossover point.	P
2.10.5.13	Wire with solvent-based enamel in wound components	Not applied.	**N/A**
	Electric strength test		—
	Routine test		**N/A**
2.10.5.14	Additional insulation in wound components	Not applied.	**N/A**
	Working voltage .....:		**N/A**
	- Basic insulation not under stress .....:		**N/A**
	- Supplementary, reinforced insulation .....:		**N/A**
2.10.6	Construction of printed boards		**P**
2.10.6.1	Uncoated printed boards	(see appended table 2.10.3 and 2.10.4)	**P**
2.10.6.2	Coated printed boards	Not applied.	**N/A**
2.10.6.3	Insulation between conductors on the same inner surface of a printed board	Not multi-layer printed board.	**N/A**
2.10.6.4	Insulation between conductors on different layers of a printed board	See above.	**N/A**
	Distance through insulation		**N/A**
	Number of insulation layers (pcs) .....:		**N/A**

IEC 60950-1			
Clause	Requirement + Test	Result - Remark	Verdict
2.10.7	Component external terminations	Coatings not used over terminations to increase effective clearance and creepage distance.	**N/A**
2.10.8	Tests on coated printed boards and coated components		**N/A**
2.10.8.1	Sample preparation and preliminary inspection		**N/A**
2.10.8.2	Thermal conditioning		**N/A**
2.10.8.3	Electric strength test		**N/A**
2.10.8.4	Abrasion resistance test		**N/A**
2.10.9	Thermal cycling		**N/A**
2.10.10	Test for Pollution Degree 1 environment and insulating compound	Pollution Degree 2.	**N/A**
2.10.11	Tests for semiconductor devices and cemented joints	Photo couplers are approved components. No other components applied for.	**N/A**
2.10.12	Enclosed and sealed parts	No hermetically sealed component.	**N/A**
4	**PHYSICAL REQUIREMENTS**		P
4.1	**Stability**		P
	Angle of 10°	Test performed by client's request. The equipment does not overbalance when tilted to 10°	P
	Test force (N) ..... :	Equipment is not a floor standing unit.	N/A
4.2	**Mechanical strength**		**P**
4.2.1	General	See below. After tests, unit comply with 2.1.1, 2.6.1, 2.10 and 4.4.1.	P
	Rack-mounted equipment.		N/A
4.2.2	Steady force test, 10 N	Applied on internal components No components located such that distances according to 2.10 can be reduced.	P
4.2.3	Steady force test, 30 N	Internal metal enclosure used. After tests, unit complies with 2.1.1, 2.6.1, 2.10	P
4.2.4	Steady force test, 250 N	Test performed on plastic enclosure, no hazardous.	P

IEC 60950-1			
Clause	Requirement + Test	Result - Remark	Verdict
4.2.5	Impact test	500g steel ball falls freely from 1.3m on top, back and bottom of plastic enclosure, no access to hazardous parts	P
	Fall test		N/A
	Swing test		N/A
4.2.6	Drop test; height (mm) ..... :		N/A
4.2.7	Stress relief test	70ºC, 7 hours, no deformation on all sources of plastic enclosure.	P
4.2.8	Cathode ray tubes	No CRT	N/A
	Picture tube separately certified ..... :		
4.2.9	High pressure lamps	No high pressure lamps provided.	N/A
4.2.10	Wall or ceiling mounted equipment; force (N) ..... :	An additional force 123.8N for 27 inch models or 92.7 for 23.6 inch models required by client applied downwards through the centre of gravity of the equipment for 1 min after the removal of base. After the test, the equipment was not damaged. (123.8N = 3 x 4.21 x 9.8N) (92.7N = 3 x 3.15 x 9.8N)	P
4.5	**Thermal requirements**		**P**
4.5.1	General		**P**
4.5.2	Temperature tests		**P**
	Normal load condition per Annex L ..... :	Equipment loaded with rated output current.	—
4.5.3	Temperature limits for materials	(see appended table 4.5)	**P**
4.5.4	Touch temperature limits	(see appended table 4.5)	**P**
4.5.5	Resistance to abnormal heat ..... :	Bobbin materials of all transformers T901 and line chock L9901 are Phenolic that are accepted without further tests.	**P**
5	**ELECTRICAL REQUIREMENTS AND SIMULATED ABNORMAL CONDITIONS**		**P**
5.1	**Touch current and protective conductor current**		**P**
5.1.1	General	See sub-clauses 5.1.2 to 5.1.6.	**P**

IEC 60950-1			
Clause	Requirement + Test	Result - Remark	Verdict
5.1.2	Configuration of equipment under test (EUT)	See below.	**P**
5.1.2.1	Single connection to an a.c. mains supply	EUT has only one mains connection.	**P**
5.1.2.2	Redundant multiple connections to an a.c. mains supply		**N/A**
5.1.2.3	Simultaneous multiple connections to an a.c. mains supply		**N/A**
5.1.3	Test circuit	Using figure 5A.	**P**
5.1.4	Application of measuring instrument	Using measuring instrument in annex D.	**P**
5.1.5	Test procedure		**P**
5.1.6	Test measurements	(see appended table 5.1.6)	**P**
	Supply voltage (V) .....:		—
	Measured touch current (mA) .....:		—
	Max. allowed touch current (mA) .....:		—
	Measured protective conductor current (mA) .....:		—
	Max. allowed protective conductor current (mA) ...:		—
5.1.7	Equipment with touch current exceeding 3,5 mA	Touch current does not exceed 3.5mA.	**N/A**
5.1.7.1	General .....:		**N/A**
5.1.7.2	Simultaneous multiple connections to the supply		**N/A**
5.1.8	Touch currents to telecommunication networks and cable distribution systems and from telecommunication networks	No TNV circuits.	**N/A**
5.1.8.1	Limitation of the touch current to a telecommunication network or to a cable distribution system		**N/A**
	Supply voltage (V) .....:		—
	Measured touch current (mA) .....:		—
	Max. allowed touch current (mA) .....:		—
5.1.8.2	Summation of touch currents from telecommunication networks		**N/A**
	a) EUT with earthed telecommunication ports .....:		**N/A**
	b) EUT whose telecommunication ports have no reference to protective earth		**N/A**

5.2	**Electric strength**		**P**
5.2.1	General	(see appended table 5.2)	**P**
5.2.2	Test procedure	(see appended table 5.2)	**P**

IEC 60950-1			
Clause	Requirement + Test	Result - Remark	Verdict

5.3	**Abnormal operating and fault conditions**		**P**
5.3.1	Protection against overload and abnormal operation	Ventilation openings blocked, output of power supply board overloaded, no unaccepted overheating of parts (see appended table 5.3)	**P**
5.3.2	Motors	Motors not used.	**N/A**
5.3.3	Transformers	(see appended Annex C and table 5.3)	**P**
5.3.4	Functional insulation .....:	By short-circuited, results see appended table 5.3.	**P**
5.3.5	Electromechanical components	No electromechanical component.	**N/A**
5.3.6	Audio amplifiers in ITE .....:		**N/A**
5.3.7	Simulation of faults	(see appended table 5.3.)	**P**
5.3.8	Unattended equipment	No such equipment.	**N/A**
5.3.9	Compliance criteria for abnormal operating and fault conditions		**P**
5.3.9.1	During the tests	No fire or molten metal occurred and no deformation of enclosure during the tests.	**P**
5.3.9.2	After the tests	No reduction of clearance and creepage distance. Electric strength test is made on basic, supplementary and reinforced insulation after test.	**P**

U	**ANNEX U, INSULATED WINDING WIRES FOR USE WITHOUT INTERLEAVED INSULATION (see 2.10.5.4)**		**P**
		Approved triple insulated wire used.	—

IEC 60950-1			
Clause	Requirement + Test	Result - Remark	Verdict

1.5.1	TABLE: List of critical components				P
Object/part No.	Manufacturer/ trademark	Type/model	Technical data	Standard (Edition / year)	Mark(s) of conformity[1])
LCD Panel with LED backlight for 23.6 inch models	CHI MEI	M236H*-*** (*can be 0~9, A~Z, blank for marking purpose)	23.6 inch panel with LED backlight The declared power consumption is 20.75W and backlight input voltage is 51.2V in specification.	IEC 60950-1	Tested in equipment
	IVO	M236MWF* (*can be 0~9, A~Z, blank for marking purpose)	23.6 inch panel with LED backlight The declared power consumption is 18.95W and backlight input voltage is 28.8V in specification.	IEC 60950-1	Tested in equipment
	BOE	HM236W**-*** (*can be 0~9, A~Z, blank for marking purpose)	23.6 inch panel with LED backlight The declared power consumption is 20.076W and backlight input voltage is 46.5V in specification.	IEC 60950-1	Tested in equipment
	TPV	TPM236** (*can be 0~9, A~Z, blank for marking purpose)	23.6 inch panel with LED backlight The declared power consumption is 17.7W and backlight input voltage is 31.5V in specification.	IEC 60950-1	Tested in equipment

IEC 60950-1			
Clause	Requirement + Test	Result - Remark	Verdict

	TPV	TPM236WF* (*can be 0~9, A~Z, blank for marking purpose)	23.6 inch panel with LED backlight The declared power consumption is 20.4W and backlight input voltage is 35.2V in specification.	IEC 60950-1	Tested in equipment
	CHI MEI	M236H**-*** (*can be 0~9, A~Z, blank for marking purpose)	23.6 inch panel with LED backlight The declared power consumption is 20.2W and backlight input voltage is 57.6V in specification.	IEC 60950-1	Tested in equipment
	BOE	HR236WU*-*** (*can be 0~9, A~Z, blank for marking purpose)	23.6 inch panel with LED backlight The declared power consumption is 22.8W and backlight input voltage is 44.8V in specification.	IEC 60950-1	Tested in equipment
	SAMSUNG	LTM236FL** (*can be 0~9, A~Z, blank for marking purpose)	23.6 inch panel with LED backlight The declared power consumption is 23.83W and backlight input voltage is 34.1V in specification.	IEC 60950-1	Tested in equipment
Metal enclosure (except part under power board)	interchangeable	interchangeable	Metal thickness: min. 0.4mm	--	--
Metal enclosure (under power board)	interchangeable	interchangeable	Metal thickness: min. 0.81mm	--	--
PCB	interchangeable	interchangeable	V-1 or better, min. 105°C	UL 94	UL

IEC 60950-1			
Clause	Requirement + Test	Result - Remark	Verdict

Mylar sheet between power board and metal enclosure type B	interchangeable	interchangeable	min. 0.25mm thickness, V-2, 105°C	UL 94	UL
Mylar sheet for metal enclosure type B (used to cover the side opening of metal enclosure)	interchangeable	interchangeable	min. 0.4mm thickness, V-1 or better, 105°C, adhered to metal enclosure by below adhesive or glue	--	UL
Power Supply with LED driver board, type No. 715G7775 by TPV					
AC-Inlet (CN901)	Inalways Corporation Co., Ltd.	0707-1, 0711-2, 0714	10A, 250V, 70°C	IEC/ EN 60320-1, UL498	VDE, UL
	Zhang Jia Gang Hua Jie Electronics Co., Ltd.	SA-4S SA-4S-1	10A, 250V, 70°C	IEC/ EN 60320-1, UL498	VDE, UL
	Rong Feng Industrial Co., Ltd.	SS-120, SS-7B	10A, 250V, 70°C	IEC/ EN 60320-1, UL498	VDE, UL
	DELIKANG/ Douling	CDJ-3 CDJ-3-1	10A, 250V, 70°C	IEC/ EN 60320-1, UL498	VDE, UL
	Solteam Electronics Co., Ltd.	ST-01	10A, 250V, 70°C	IEC/ EN 60320-1, UL498	VDE, UL
	TECX	TU-301-AP, TU-301-S, TU-301-SP, TU-301-A	10A, 250V, 70°C	IEC/ EN 60320-1, UL498	VDE, UL
	Yueqing Hongchang	DB-14	10A, 250V, 70°C	IEC/ EN 60320-1, UL498	VDE, UL
	Yueqing Hongchang	DB-6	15A, 250Vac	IEC/ EN 60320-1, UL498	VDE, UL
	TECX	TU-301 series	10A, 250V, 70°C	IEC/ EN 60320-1,	VDE
Power Switch (SW901) (optional)	Solteam	OR-L	VDE: 6A, 250Vac; UL:10A, 125Vac	IEC/EN 61058-1, ANSI/UL 1054	VDE, UL
	Rong Feng	RF-1003	VDE: 10(4)A, 250Vac; UL: 10A, 250Vac	IEC/EN 61058-1, ANSI/UL 1054	VDE, UL

IEC 60950-1			
Clause	Requirement + Test	Result - Remark	Verdict

	Solteam	MR-22	ENEC: 12(4)A, 250Vac; UL: 12A, 125/250Vac	IEC/EN 61058-1, ANSI/UL 1054	ENEC, UL
	Solteam	MR-21 series	ENEC: 12(4)A, 250Vac; UL: 12A, 125/250Vac	IEC/EN 61058-1, ANSI/UL 1054	ENEC, UL
Fuse (F9901 for primary; F901 for L.P.S +5V)	Conquer	MET, MST, PTU	T4AL, 250Vac	IEC/ EN 60127-1, IEC/ EN 60127-3, UL 248	VDE, UL
	Littelfuse, Inc. Wickmann	392, 382-series	T4AL, 250Vac	IEC/ EN 60127-1, IEC/ EN 60127-3, UL 248	VDE, UL
	Cooper Bussmann	SR-5, SS-5	T4AL, 250Vac	IEC/ EN 60127-1, IEC/ EN 60127-3, UL 248	VDE, UL
	Ever Island Electric Co. ltd and Walter electric	2000, 2010 serie(s)	T4AL, 250Vac	IEC/ EN 60127-1, IEC/ EN 60127-3, UL 248	VDE, UL
Fuse (F801 for L.P.S +16V)	Conquer	MET, MST, PTU	T2AL, 250Vac	IEC/ EN 60127-1, IEC/ EN 60127-3, UL 248	VDE, UL
	Littelfuse, Inc. Wickmann	392, 382-series	T2AL, 250Vac	IEC/ EN 60127-1, IEC/ EN 60127-3, UL 248	VDE, UL
	Cooper Bussmann	SR-5, SS-5	T2AL, 250Vac	IEC/ EN 60127-1, IEC/ EN 60127-3, UL 248	VDE, UL
	Ever Island Electric Co. ltd and Walter electric	2000, 2010 serie(s)	T2AL, 250Vac	IEC/ EN 60127-1, IEC/ EN 60127-3, UL 248	VDE, UL
Y- Capacitor (C9901, C9902) (Y1 or Y2 type) (optional)	Walsin	AC, AH	Max. 4700pF, 250Vac, 85°C	IEC/EN 60384-14, UL 60384-14	VDE, UL
	Yinan Don	CT81	Max. 4700pF, 250Vac, 85°C	IEC/EN 60384-14, UL 60384-14	VDE, UL
	Haohua	CT7	Max. 4700pF, 250Vac, 85°C	IEC/EN 60384-14, UL 60384-14	VDE, UL
	Wansheng	CT7	Max. 4700pF, 250Vac, 85°C	IEC/EN 60384-14, UL 60384-14	VDE, UL
	TDK	CS, CD	Max. 4700pF, 250Vac, 85°C	IEC/EN 60384-14, UL 60384-14	VDE, UL
	Samwha	SD	Max. 4700pF, 250Vac, 85°C	IEC/EN 60384-14, UL 60384-14	VDE, UL

IEC 60950-1			
Clause	Requirement + Test	Result - Remark	Verdict

	Murata	KH, KX	Max. 4700pF, 250Vac, 85°C	IEC/EN 60384-14, UL 60384-14	VDE, UL
	Matsushita	NS-A, NS-B	Max. 4700pF, 250Vac, 85°C	IEC/EN 60384-14, UL 60384-14	VDE, UL
	JYA-NAY	JY, JN	Max. 4700pF, 250Vac, 85°C	IEC/EN 60384-14, UL 60384-14	VDE, UL
	Success	SE, SB	Max. 4700pF, 250Vac, 85°C	IEC/EN 60384-14, UL 60384-14	VDE, UL
	Hongming	F	Max. 4700pF, 250Vac, 85°C	IEC/EN 60384-14, UL 60384-14	VDE, UL
Y- Capacitor (C9904) Y1 type (optional)	Walsin	AH	Max. 4700pF, 250Vac, 85°C	IEC/EN 60384-14 UL 60384-14	VDE, UL
	Yinan Don's	CT81	Max. 4700pF, 250Vac, 85°C	IEC/EN 60384-14 UL 60384-14	VDE, UL
	Haohua	CT7	Max. 4700pF, 250Vac, 85°C	IEC/EN 60384-14 UL 60384-14	VDE, UL
	Wansheng	CT7	Max. 4700pF, 250Vac, 85°C	IEC/EN 60384-14 UL 60384-14	VDE, UL
	TDK	CD	Max. 4700pF, 250Vac, 85°C	IEC/EN 60384-14 UL 60384-14	VDE, UL
	Murata	KX	Max. 4700pF, 250Vac, 85°C	IEC/EN 60384-14 UL 60384-14	VDE, UL
	Matsushita	NS-A	Max. 4700pF, 250Vac, 85°C	IEC/EN 60384-14 UL 60384-14	VDE, UL
	JYA-NAY	JN	Max. 4700pF, 250Vac, 85°C	IEC/EN 60384-14 UL 60384-14	VDE, UL
	Success	SE, SB	Max. 4700pF, 250Vac, 85°C	IEC/EN 60384-14 UL 60384-14	VDE, UL
	Hongming	F	Max. 4700pF, 250Vac, 85°C	IEC/EN 60384-14 UL 60384-14	VDE, UL
X-Capacitor (C9903) (X1 or X2 type) (optional)	Ultra Tech Xiphi	HQX	Max. 0.47µF, min. 275Vac, 85°C	IEC/EN 60384-14, UL 60384-14	VDE, UL
	Hua Jung	MKP	Max. 0.47µF, min. 275Vac, 85°C	IEC/EN 60384-14, UL 60384-14	ENEC (Semko), UL
	Faratronic	MKP62	Max. 0.47µF, min. 275Vac, 85°C	IEC/EN 60384-14, UL 60384-14	VDE, UL
	Europtronic	MPX	Max. 0.47µF, min. 275Vac, 85°C	IEC/EN 60384-14, UL 60384-14	VDE, UL

IEC 60950-1			
Clause	Requirement + Test	Result - Remark	Verdict

	Europtronic	MPX2	Max. 0.47µF, min. 275Vac, 85°C	IEC/EN 60384-14, UL 60384-14	VDE, UL
	Liow Gu	GS-L	Max. 0.47µF, min. 275Vac, 85°C	IEC/EN 60384-14, UL 60384-14	VDE, UL
	EPCOS	B3292#	Max. 0.47µF, min. 275Vac, 85°C	IEC/EN 60384-14, UL 60384-14	VDE, UL
	Arcotronics	R.46	Max. 0.47µF, min. 275Vac, 85°C	IEC/EN 60384-14, UL 60384-14	ENEC(IMQ), UL
	ZHUHAI SUNG HO ELECTRONICS CO LTD	CMPP	Max. 0.47µF, min. 275Vac, 85°C	IEC/EN 60384-14, UL 60384-14	VDE, UL
Photo Coupler (U902)	Sharp	PC123	Di=0.7mm, int.cr= thermal cycling [3)], ext.cr=8.0mm, min. 3000Vac, 100°C	DIN/EN 60747-5-2, IEC/EN 60950-1, UL 1577	VDE, UL, Semko, Fimko, Nemko
	Vishay Semiconductor	TCET1103	Di=0.6mm, int.cr= thermal cycling [3)], ext.cr=8.4mm, min. 3000Vac, 100°C	DIN/EN 60747-5-2, IEC/EN 60950-1, UL 1577	VDE, UL, Semko, Fimko
	Everlight Electronics Co., Ltd.	EL817	Di=0.5mm, int.cr=6.0mm, ext.cr=7.7mm, min. 3000Vac, 100°C	DIN/EN 60747-5-2, IEC/EN 60950-1, UL 1577	VDE, UL, Semko, Fimko, Nemko
	Everlight Electronics Co., Ltd.	EL1013	Di=0.4mm, int.cr=thermal cycling [3)], ext.cr=8.0mm, min. 3000Vac, 100°C	DIN/EN 60747-5-2, IEC/EN 60950-1, UL 1577	VDE, UL, Semko
	Lite-on	LTV-817	Di=0.4mm, int.cr= thermal cycling [3)], ext.cr=8.0m, min. 3000Vac, 100°C	DIN/EN 60747-5-2, IEC/EN 60950-1, UL 1577	VDE, UL

IEC 60950-1					
Clause	Requirement + Test		Result - Remark		Verdict
	Renesas	PS2561-1 PS2561L-1 PS2561L1-1 PS2561L2-1 PS2561DL1-1	Di=0.4mm, int.cr=thermal cycling [3)], ext.cr=8.0mm, min. 3000Vac, 100°C	DIN/EN 60747-5-2, IEC/EN 60950-1, UL 1577	VDE, UL, Fimko, Nemko
	TOSHIBA	TLP421F	Di=0.4mm, int.cr=thermal cycling [3)], ext.cr=8.0mm, min. 3000Vac, 100°C	DIN/EN 60747-5-2, IEC/EN 60950-1, UL 1577	VDE, UL, Semko, Fimko
	TOSHIBA	TLP781F TLP781	Di=0.4mm, int.cr=thermal cycling [3)], ext.cr=8.0mm, min. 3000Vac, 100°C	DIN/EN 60747-5-2, IEC/EN 60950-1, UL 1577	VDE, UL, Semko, Fimko
Bridging Diode (BD9902)	interchangeable	interchangeable	Min. 2.0A, min. 600Vac	--	--
Ripple Capacitor (C901)	interchangeable	interchangeable	45-150µF, min. 450 V, min. 105 °C	--	--
Transistor (Q901)	interchangeable	interchangeable	Min. 600V, min. 6.0A	--	--
Thermistors (TH9901) (Optional)	interchangeable	interchangeable	Min. 0.2Ω at 25°C, min. 2A	--	--
Current sensor resistor (R914)	interchangeable	interchangeable	Min 0.22Ω, 2W	--	--
Bleeder Resistor (R9901, R9902, R9903)	interchangeable	SMD type	Max. 680 kohm, min. 1/4 W (three in series, located after fuse)	--	--
Line Choke (L9901) (optional)	ASET	73G174-241-X	105°C	--	Tested in equipment
	CHENPING	73G174-241-CP	105°C	--	Tested in equipment
	YUVA	73G174-241-N	105°C	--	Tested in equipment
	Dadon	73G174-241-H	105°C	--	Tested in equipment
Transformer (T901) (Alt.)	TAICHANG	380GL32P542S	Class B	Applicable part according to IEC60950-1 and IEC 60085	Accepted by TÜV Rheinland

IEC 60950-1			
Clause	Requirement + Test	Result - Remark	Verdict

Bobbin	Sumitomo	PM-9820	V-0, Phenolic, 150°C	UL 94	UL
Triple insulation wire	GREAT LEOFLON	TRW(B)	Max.130°C	IEC/EN 60950-1, VDE0805 Teil1, UL 2353	UL, VDE
Teflon tube	GREAT HOLDING	TFL	200°C	UL 224	UL
Transformer (T901) (Alt.)	Channelon	380GL32P542H	Class B	Applicable part according to IEC60950-1 and IEC 60085	Accepted by TÜV Rheinland
Bobbin	Sumitomo	PM-9820	V-0, Phenolic, 150°C	UL 94	UL
Triple insulation wire	COSMOLINK	TIW-M	Max.130°C	IEC/EN 60950-1, VDE0805 Teil1, UL 2353	UL, VDE
Teflon tube	GREAT HOLDING	TFL	200°C	UL 224	UL
Transformer (T901) (Alt.)	LI TAI	380GL32P542L	Class B	Applicable part according to IEC60950-1 and IEC 60085	Accepted by TÜV Rheinland
Bobbin	Sumitomo	PM-9820	V-0, Phenolic, 150°C	UL 94	UL
Triple insulation wire	COSMOLINK	TIW-M	Max.130°C	IEC/EN 60950-1, VDE0805 Teil1, UL 2353	UL, VDE
Teflon tube	GREAT HOLDING	TFL	200°C	UL 224	UL

Supplementary information:

1. Provided evidence ensures the agreed level of compliance.
2. ‘Di’ means distance through insulation, ‘int.’ Means internal distance of creepage and ‘ext.’ Means external distance of creepage.
3. There is no any internal creepage distance. Test according to IEC60950-1:2001, cl. 2.10.8 (same as requirement in IEC60950-1:2005, cl. 2.10.9) has been carried out ten times for the components at 100°C / 25°C / 0°C / 25°C. Humidity treatment of 48 hours as well as electric strength tests at 3000V / 1 minute was carried out to the component after thermal cycling test.
4. All sources of photo coupler were certified according to DIN EN60747-5-2 which in compliance with the requirements and provisions of IEC 60747-5-5.
5. All sources of photo coupler were in compliance with CTL DSH 759 decision.
6. All sources of transformer were checked with same construction.

IEC 60950-1			
Clause	Requirement + Test	Result - Remark	Verdict

1.6.2	TABLE: Electrical data (in normal conditions)						P
Fuse #	U (V)	I (A)	Irated (A)	P (W)	Ifuse (A)	Condition/status	
For 27 inch models							
Tested with power board 715G7775, main board 715G5436 and panel M270DAN** (AUO)**							
VGA mode							
F9901	90V/50Hz	0.45	--	23.4	0.45	Normal load condition	
F9901	90V/60Hz	0.45	--	23.4	0.45	Normal load condition	
F9901	100V/50Hz	0.41	1.5	23.3	0.41	Normal load condition	
F9901	100V/60Hz	0.41	1.5	23.2	0.41	Normal load condition	
F9901	240V/50Hz	0.24	1.5	23.1	0.24	Normal load condition	
F9901	240V/60Hz	0.24	1.5	23.1	0.24	Normal load condition	
F9901	264V/50Hz	0.22	--	23.1	0.22	Normal load condition	
F9901	264V/60Hz	0.22	--	23.1	0.22	Normal load condition	
DVI mode							
F9901	90V/50Hz	0.45	--	23.9	0.45	Normal load condition	
F9901	90V/60Hz	0.45	--	23.8	0.45	Normal load condition	
F9901	100V/50Hz	0.41	1.5	23.8	0.41	Normal load condition	
F9901	100V/60Hz	0.41	1.5	23.8	0.41	Normal load condition	
F9901	240V/50Hz	0.23	1.5	23.7	0.23	Normal load condition	
F9901	240V/60Hz	0.23	1.5	23.6	0.23	Normal load condition	
F9901	264V/50Hz	0.22	--	23.6	0.22	Normal load condition	
F9901	264V/60Hz	0.22	--	23.6	0.22	Normal load condition	
HDMI mode							
F9901	90V/50Hz	0.48	--	25.5	0.48	Normal load condition	
F9901	90V/60Hz	0.48	--	25.4	0.48	Normal load condition	
F9901	100V/50Hz	0.45	1.5	25.3	0.45	Normal load condition	
F9901	100V/60Hz	0.45	1.5	25.3	0.45	Normal load condition	
F9901	240V/50Hz	0.26	1.5	25.4	0.26	Normal load condition	
F9901	240V/60Hz	0.26	1.5	25.3	0.26	Normal load condition	
F9901	264V/50Hz	0.24	--	25.4	0.24	Normal load condition	
F9901	264V/60Hz	0.24	--	25.3	0.24	Normal load condition	
Tested with power board 715G7775, main board 715G7612 and panel M270DAN** (AUO)**							
VGA mode							
F9901	90V/50Hz	0.43	--	23.5	0.43	Normal load condition	

IEC 60950-1						
Clause	Requirement + Test			Result - Remark		Verdict

F9901	90V/60Hz	0.43	--	23.4	0.43	Normal load condition
F9901	100V/50Hz	0.40	1.5	23.4	0.40	Normal load condition
F9901	100V/60Hz	0.39	1.5	23.4	0.39	Normal load condition
F9901	240V/50Hz	0.23	1.5	23.3	0.23	Normal load condition
F9901	240V/60Hz	0.22	1.5	23.3	0.22	Normal load condition
F9901	264V/50Hz	0.21	--	23.2	0.21	Normal load condition
F9901	264V/60Hz	0.21	--	23.2	0.21	Normal load condition
DisplayPort mode						
F9901	90V/50Hz	0.50	--	27.1	0.50	Normal load condition
F9901	90V/60Hz	0.50	--	27.0	0.50	Normal load condition
F9901	100V/50Hz	0.47	1.5	26.7	0.47	Normal load condition
F9901	100V/60Hz	0.47	1.5	26.6	0.47	Normal load condition
F9901	240V/50Hz	0.27	1.5	26.3	0.27	Normal load condition
F9901	240V/60Hz	0.27	1.5	26.3	0.27	Normal load condition
F9901	264V/50Hz	0.25	--	26.2	0.25	Normal load condition
F9901	264V/60Hz	0.25	--	26.1	0.25	Normal load condition
HDMI mode						
F9901	90V/50Hz	0.54	--	28.7	0.54	Normal load condition
F9901	90V/60Hz	0.54	--	28.6	0.54	Normal load condition
F9901	100V/50Hz	0.50	1.5	28.4	0.50	Normal load condition
F9901	100V/60Hz	0.50	1.5	28.5	0.50	Normal load condition
F9901	240V/50Hz	0.29	1.5	27.8	0.29	Normal load condition
F9901	240V/60Hz	0.29	1.5	27.5	0.29	Normal load condition
F9901	264V/50Hz	0.27	--	27.9	0.27	Normal load condition
F9901	264V/60Hz	0.27	--	27.8	0.27	Normal load condition
For 23.6 inch models						
Tested with power board 715G7775, main board 715G5436 and panel LTM236FL (SAMSUNG)**						
VGA mode						
F9901	90V/50Hz	0.39	--	20.7	0.39	Normal load condition
F9901	90V/60Hz	0.39	--	20.6	0.39	Normal load condition
F9901	100V/50Hz	0.36	1.5	20.6	0.36	Normal load condition
F9901	100V/60Hz	0.36	1.5	20.6	0.36	Normal load condition
F9901	240V/50Hz	0.20	1.5	20.5	0.20	Normal load condition
F9901	240V/60Hz	0.20	1.5	20.4	0.20	Normal load condition

IEC 60950-1						
Clause	Requirement + Test			Result - Remark		Verdict

F9901	264V/50Hz	0.19	--	20.3	0.19	Normal load condition
F9901	264V/60Hz	0.19	--	20.3	0.19	Normal load condition
DVI mode						
F9901	90V/50Hz	0.39	--	21.1	0.39	Normal load condition
F9901	90V/60Hz	0.39	--	21.0	0.39	Normal load condition
F9901	100V/50Hz	0.37	1.5	20.9	0.37	Normal load condition
F9901	100V/60Hz	0.36	1.5	21.0	0.36	Normal load condition
F9901	240V/50Hz	0.21	1.5	21.0	0.21	Normal load condition
F9901	240V/60Hz	0.20	1.5	20.9	0.20	Normal load condition
F9901	264V/50Hz	0.20	--	20.9	0.20	Normal load condition
F9901	264V/60Hz	0.20	--	20.8	0.20	Normal load condition
HDMI mode						
F9901	90V/50Hz	0.41	--	23.4	0.41	Normal load condition
F9901	90V/60Hz	0.41	--	23.4	0.41	Normal load condition
F9901	100V/50Hz	0.38	1.5	23.3	0.38	Normal load condition
F9901	100V/60Hz	0.38	1.5	23.2	0.38	Normal load condition
F9901	240V/50Hz	0.22	1.5	23.2	0.22	Normal load condition
F9901	240V/60Hz	0.22	1.5	23.2	0.22	Normal load condition
F9901	264V/50Hz	0.20	--	23.1	0.20	Normal load condition
F9901	264V/60Hz	0.20	--	23.1	0.20	Normal load condition
Tested with power board 715G7775, main board 715G76970 and panel LTM236FL (SAMSUNG)**						
VGA mode						
F9901	90V/50Hz	0.38	--	19.8	0.38	Normal load condition
F9901	90V/60Hz	0.37	--	19.7	0.37	Normal load condition
F9901	100V/50Hz	0.35	1.5	19.7	0.35	Normal load condition
F9901	100V/60Hz	0.35	1.5	19.6	0.35	Normal load condition
F9901	240V/50Hz	0.20	1.5	19.6	0.20	Normal load condition
F9901	240V/60Hz	0.20	1.5	19.5	0.20	Normal load condition
F9901	264V/50Hz	0.19	--	19.6	0.19	Normal load condition
F9901	264V/60Hz	0.19	--	19.5	0.19	Normal load condition
DisplayPort mode						
F9901	90V/50Hz	0.38	--	20.1	0.38	Normal load condition
F9901	90V/60Hz	0.38	--	20.1	0.38	Normal load condition
F9901	100V/50Hz	0.35	1.5	20.1	0.35	Normal load condition

IEC 60950-1			
Clause	Requirement + Test	Result - Remark	Verdict

F9901	100V/60Hz	0.35	1.5	20.0	0.35	Normal load condition
F9901	240V/50Hz	0.20	1.5	20.1	0.20	Normal load condition
F9901	240V/60Hz	0.20	1.5	20.0	0.20	Normal load condition
F9901	264V/50Hz	0.19	--	20.1	0.19	Normal load condition
F9901	264V/60Hz	0.19	--	20.1	0.19	Normal load condition
HDMI mode						
F9901	90V/50Hz	0.39	--	20.6	0.39	Normal load condition
F9901	90V/60Hz	0.39	--	20.6	0.39	Normal load condition
F9901	100V/50Hz	0.35	1.5	20.5	0.35	Normal load condition
F9901	100V/60Hz	0.35	1.5	20.5	0.35	Normal load condition
F9901	240V/50Hz	0.20	1.5	20.3	0.20	Normal load condition
F9901	240V/60Hz	0.20	1.5	20.3	0.20	Normal load condition
F9901	264V/50Hz	0.19	--	20.2	0.19	Normal load condition
F9901	264V/60Hz	0.19	--	20.1	0.19	Normal load condition

Note(s):
1. Maximum normal load: maximum brightness, maximum contrast, full white screen; speakers were loaded with 1KHz sinusoidal signal and turned to maximum volume; which was considered as maximum output power.

2. Panels mentioned above chosen for the test, due to the higher power consumption specified in panel spec than any other panel of same size.

2.1.1.5	**TABLE: max. V, A, VA test**			**P**
Voltage (rated) (V)	Current (rated) (A)	Voltage (max.) (V)	Current (max.) (A)	VA (max.) (VA)
+16V [1.]	--	16.3	5.2	47
+5V [2.]	--	5.3	10	44

Note(s): Test voltage is 264Vac, 60Hz

1. Test on the circuit after fuse F801 on power board.

2. Test on the circuit after fuse F901 on power board.

2.1.1.7	**TABLE: discharge test**			**P**
Condition	τ calculated (s)	τ measured (s)	t u→ 0V (s)	Comments
System on (with fuse in, L-N)	0.96	0.77	--	U_{OC} = 381 Vpk, 37% of U_{OC} = 141 Vpk,

IEC 60950-1			
Clause	Requirement + Test	Result - Remark	Verdict

Supplementary information:

1. Overall capacity: (C9903=0.47μF), Discharge resistor: 2.04MΩ (R9901=R9902=R9903=680kΩ);
2. Supplied with 264V/60Hz and 90V/60Hz. And worse test result was recorded.

2.2	TABLE: Hazardous voltage measurement		P
Component (measured between)	max. voltage (V) (normal operation)		Voltage Limiting Components
	V peak	V d.c.	
T901 Pin 6,7 – Pin 8,9	21.3	--	--
T901 Pin 10 – Pin 8,9	61.0	--	--
After R915	59.7	--	R915
After C912	31.0	--	C912
After C913/D908	--	16.3	C913/D908
After L801	--	30.7	--
Converter circuit to Earth	--	41.6	--
Fault test performed on voltage limiting components	Voltage measured (V) in SELV circuits (V peak or V d.c.)		
R915 (s-c)	16.2V (for +16V output)		
C912 (s-c)	16.3V (for +16V output)		
C913 (s-c)	16.3V (for +16V output)		
D908 (s-c)	0V (for +16V output)		
Supplementary information: Input Voltage is 240Vac, 60Hz			

2.4.2	TABLE: limited current circuit measurement				P
Location	Voltage (V)	Current (mA)	Freq. (kHz)	Limit (mA)	Comments
bridging Y1 capacitor (C9904)	--	0.52	--	0.7	--
Supplementary information: 1. Measured with figure D.1 instrument.					

IEC 60950-1			
Clause	Requirement + Test	Result - Remark	Verdict

2.5	TABLE: Limited power sources				P
Circuit output tested: **+16V output**					
Note: Measured Uoc (V) with all load circuits disconnected:					
	Uoc (V)	I_{sc} (A)		VA	
		Meas.	Limit	Meas.	Limit
Normal condition	16.3	5.2	61.3 (20)	47	250
Circuit output tested: **+5V output**					
Note: Measured Uoc (V) with all load circuits disconnected:					
	Uoc (V)	I_{sc} (A)		VA	
		Meas.	Limit	Meas.	Limit
Normal condition	5.3	10	188.7 (40)	44	250

Supplementary information:

1. Input Voltage is 240Vac, 60Hz. Sc=Short circuit, Oc=Open circuit.
2. +16V and +5V outputs with fuses F801, F901 that will break the circuit within 120 s with a current equal to 210%. Current limit of table 2C reduced to breaking capacity of the fuse (20A or 40A).

2.6.3.4	TABLE: ground continue test	P
Location	Resistance measured (mΩ)	Comments
PE terminal of AC inlet to internal metal enclosure	5.0	Test with 32A, 2 minutes
PE terminal of AC inlet to internal metal enclosure	5.0	Test with 40A, 2 minutes
PE terminal of AC inlet to C9904/C9909/C9910 secondary trace	6.1	Test with 32A, 2 minutes
PE terminal of AC inlet to C9904/C9909/C9910 secondary trace	6.3	Test with 40A, 2 minutes
Note(s):		

2.10.2	Table: working voltage measurement		P
Location	Peak voltage (V)	RMS voltage (V)	Comments
T901: Pin 1 to pin 6,7	378	179	
T901: Pin 1 to pin 8,9	388	177	
T901: Pin 1 to pin 10	350	177	
T901: Pin 2 to pin 6,7	353	179	
T901: Pin 2 to pin 8,9	345	178	

IEC 60950-1			
Clause	Requirement + Test	Result - Remark	Verdict

T901: Pin 2 to pin 10	375	177	
T901: Pin 4 to pin 6,7	366	234	
T901: Pin 4 to pin 8,9	342	230	
T901: Pin 4 to pin 10	410	248	
T901: Pin 5 to pin 6,7	488	247	
T901: Pin 5 to pin 8,9	**500**	**260**	**Max Vrms & Vpeak**
T901: Pin 5 to pin 10	490	258	
U902 Pin 1-3	353	184	
U902 Pin 1-4	348	182	
U902 Pin 2-3	348	182	
U902 Pin 2-4	350	181	
C9904 Pin 1-2	341	212	
Note(s): Input Voltage is 240Vac, 60Hz			

2.10.3 and 2.10.4	**TABLE: clearance and creepage distance measurements**					**P**
Clearance cl and creepage distance dcr at/of:	U p (V)	U r.m.s. (V)	Required cl (mm)	cl (mm)	Required dcr (mm)	dcr (mm)
Functional:						
Under fuse (F9901) [1.]	420	250	2.3	2.7	2.5	4.0
Before fuse (between L-N)	420	250	2.3	4.1	2.5	6.6
Basic / supplementary:						
Line-GND [1.]	420	250	3.0	3.0 [7)]	3.0	4.2
Neutral-GND [1.]	420	250	3.0	3.0 [7)]	3.0	4.2
Under C9902 [1.]	420	250	3.0	7.9	3.0	7.9
Under C9901	420	250	3.0	7.3	3.0	7.3
Primary component C823 to metal enclosure	420	250	3.0	5.1	3.0	5.1
Primary component (main transformer) to metal enclosure	**500**	**260**	3.3	11.3	3.3	11.3
Primary component to panel plate	**500**	**260**	3.3	9.3	3.3	9.3
Reinforced:						
Under T9101	**500**	**260**	6.6	18.0	6.6	18.0
Under C9904	420	250	6.0	7.6	6.0	7.6

IEC 60950-1			
Clause	Requirement + Test	Result - Remark	Verdict

U9401 primary pin to U9401 secondary pin (trace side)	420	250	6.0	8.3	6.0	8.3

Supplementary information:

1. There is one slot measured 1mm width.
2. Core of main transformer T901 consider as primary.
3. One mylar sheet is fixed between primary components L9901, HS902 and metal enclosure to fulfill the requirement for basic insulation.
4. Glued component: C901.
5. Considered altitude correction factor 1.48 for clearances for an altitude of 5000m.
6. For clearance and creepage that did not describe above are far larger than limit above.
7. Same test result after repeat two more measurements on same position.

2.10.5	**TABLE: Distance through insulation measurements**				**P**
Distance through insulation DTI at/of:	U peak (V)	U rms (V)	Test voltage (V)	Required DTI (mm)	DTI (mm)
Photo coupler (reinforced insulation)	420	250	3000	0.4	1.

Supplementary information:

1. For approved component source see appended table 1.5.1.

4.5	**TABLE: Thermal requirements**			**P**
	Supply voltage (V)	90V/60Hz	264V/60Hz	—
	Ambient T_{min} (°C)	--	--	—
	Ambient T_{max} (°C)	--	--	—
Maximum measured temperature T of part/at.....:		T (°C)		Allowed T_{max} (°C)
Tested with power board 715G7775, main board 715G7612 and panel M270DAN** (AUO), HDMI mode**				
At horizontal orientation				
Line pin of AC Inlet CN901 (on power board)		31.7	31.0	49.3
Switch body(on power board)		31.5	30.1	59.3
C9901 body (on power board)		31.3	30.5	64.3
C9903 (on power board)		33.4	32.3	64.3
C9904 body (on power board)		34.3	33.7	64.3
L9901 coil (on power board)		41.5	40.5	84.3
PCB near BD9902 (on power board)		36.1	35.6	84.3
U902 Body		39.7	38.5	79.3

IEC 60950-1			
Clause	Requirement + Test	Result - Remark	Verdict

C901 (on power board)	35.3	34.5	84.3
T901 coil (on power board)	56.4	55.7	89.3
T901 core (on power board)	53.9	52.5	89.3
PCB near Q901 (on power board)	43.3	42.7	84.3
PCB near Main IC (main board)	41.9	41.3	84.3
PCB near L801 (on power board)	39.3	37.7	84.3
Metal enclosure	31.8	30.6	54.3
Plastic enclosure inside near T901	30.1	28.9	--
Plastic enclosure outside	26.9	25.8	74.3
Panel surface	33.6	32.7	74.3
Ambient	19.7	19.3	--
Tested with power board 715G7775, main board 715G5436 and panel LTM236FL (SAMSUNG), HDMI mode**			
At horizontal orientation			
Line pin of AC Inlet CN901 (on power board)	30.7	29.6	52.5
Switch body(on power board)	30.5	29.3	62.5
C9901 body (on power board)	31.7	30.1	67.5
C9903 (on power board)	32.7	31.5	67.5
C9904 body (on power board)	33.9	32.8	67.5
L9901 coil (on power board)	40.9	39.1	87.5
PCB near BD9902 (on power board)	34.1	33.6	87.5
U902 Body	39.7	38.5	82.5
C901 (on power board)	33.1	32.8	87.5
T901 coil (on power board)	53.4	50.7	92.5
T901 core (on power board)	50.9	49.5	92.5
PCB near Q901 (on power board)	41.9	40.1	87.5
PCB near Main IC (main board)	40.7	40.3	87.5
PCB near L801 (on power board)	39.9	38.3	87.5
Metal enclosure	31.3	30.1	57.5
Plastic enclosure inside near T901	29.1	27.9	--
Plastic enclosure outside	26.7	25.3	77.5
Panel surface	33.3	31.9	77.5

IEC 60950-1			
Clause	Requirement + Test	Result - Remark	Verdict

Ambient	22.7	22.5	--
At vertical orientation			
Line pin of AC Inlet CN901 (on power board)	30.8	29.3	51.3
Switch body(on power board)	29.7	28.9	61.3
C9901 body (on power board)	31.3	30.7	66.3
C9903 (on power board)	31.3	30.3	66.3
C9904 body (on power board)	32.7	31.9	66.3
L9901 coil (on power board)	40.3	38.8	86.3
PCB near BD9902 (on power board)	33.5	32.8	86.3
U902 Body	39.6	38.3	81.3
C901 (on power board)	32.6	31.9	86.3
T901 coil (on power board)	52.1	50.5	91.3
T901 core (on power board)	50.1	49.3	91.3
PCB near Q901 (on power board)	41.3	39.8	86.3
PCB near Main IC (main board)	39.8	39.5	86.3
PCB near L801 (on power board)	39.4	37.6	86.3
Metal enclosure	30.7	29.5	56.3
Plastic enclosure inside near T901	28.9	27.3	--
Plastic enclosure outside	26.3	24.8	76.3
Panel surface	31.9	30.1	76.3
Ambient	21.5	21.3	--

Supplementary information:

Temperature T of winding:	t_1 (°C)	R_1 (Ω)	t_2 (°C)	R_2 (Ω)	T (°C)	Allowed T_{max} (°C)	Insulation class

Supplementary information:

1. The temperatures were measured under the worst case normal mode defined in 1.2.2.1 and as described in sub-clause 1.6.2 at voltages as described above.

2. With a specified ambient temperature of 40°C, and the minimum ambient temperature during test Tam, Temperature is calculated as follows:
Winding components providing safety isolation:

- T901, Class B → T_{max} = 120°C – 10°C – 40°C+ Tamb.

Components with maximum absolute temperature of others:

- Tmax= Tmax of component – 40+Tamb.

IEC 60950-1			
Clause	Requirement + Test	Result - Remark	Verdict

4.5.5	TABLE: ball pressure test of thermoplastic parts		N/A
	allowed impression diameter (mm) .....:	≤ 2 mm	—
Part		Test temperature (°C)	Impression diameter (mm)
Note(s):			

4.6.1, 4.6.2	Table: enclosure openings	P
Location	Size (mm)	Comments
Internal metal enclosure type B, a) at horizontal orientation; b) at vertical orientation		
a) Top b) Right	1) Numerous circle openings: ∅4.8mm; 2) One rectangle openings above main board: 40.0mm x 6.9mm; 2) One oval opening above main board for speaker wires: 19.6m x 10.1mm.	1) Openings do not exceed 5mm in any dimension. No hazards. 2) Covered by plastic enclosure, no hazards. 3) No hazardous part within vertical projection of 5° from the opening.
a) Rear b) Rear	Numerous circle openings above main board: ∅6.5mm x 3; ∅5.5mm x 4	No hazardous part within vertical projection of 5° from the opening.
a) Left b) Top	Numerous circle openings: ∅4.8mm	Openings do not exceed 5mm in any dimension. No hazards.
a) Right b) Bottom	No opening.	--
a) Bottom b) Left	1) Under power board side: Numerous ∅1.86mm holes; spacing of holes (centre to centre): 3.2 mm; thickness of metal: min.0.81mm. 2) Under main board side: two ∅3.0mm holes.	1) Comply with table 4D. 2) Main board is supplied by LPS, not required for fire enclosure.

4.7	TABLE: Resistance to fire				P
Part	Manufacturer of material	Type of material	Thickness (mm)	Flammability class	Evidence
PCB	--	--	--	V-1	UL

IEC 60950-1			
Clause	Requirement + Test	Result - Remark	Verdict

Supplementary information: See table 1.5.1.

* Not fire enclosure.

5.1	TABLE: touch current measurement			P
Measured between:	Measured (mA)	Limit (mA)	Comments/conditions	
L – metal enclosure	0.47	3.5	Switch “e” open	
N – metal enclosure	0.45	3.5	Switch “e” open	
L – signal connector	0.08	0.25	Switch “e” close *	
N – signal connector	0.08	0.25	Switch “e” close *	
L – plastic enclosure	0.005	0.25	Switch “e” close	
N – plastic enclosure	0.005	0.25	Switch “e” close	

Supplementary information: Supplied with 264V/60Hz.

* Test performed with functional earthing disconnected.

5.2	TABLE: Electric strength tests, impulse tests and voltage surge tests		P
Test voltage applied between:	Voltage shape (AC, DC, impulse, surge)	Test voltage (V)	Breakdown Yes / No
Test with 23.6 inch models			
Basic/supplementary:			
Unit primary to earthed metal part	AC	1740	No
Mylar sheet between power board and metal enclosure	AC	1740	No
Reinforced:			
L/N to accessible plastic enclosure with metal foil	AC	3000	No
Unit primary to secondary (output)	AC	3000	No
T901 [1)]: primary to secondary	AC	3000	No
T901 [1)]: secondary to core	AC	3000	No
T901 [1)]: each layer of insulation tape	AC	3000	No

Supplementary information:

1. For all sources of T901;

2) Test after humidity conditioning test.

IEC 60950-1			
Clause	Requirement + Test	Result - Remark	Verdict

5.3	TABLE: Fault condition tests		P
	Ambient temperature (°C) .....:	See below	—
	Power source for EUT: Manufacturer, model/type, output rating .....:		—

Component No.	Fault	Supply voltage (V)	Test time	Fuse #	Fuse current (A)	Observation
Test with power board 715G7775 on 23.6 inch models						
T901 Pin 1 to pin 2	s-c	240	5 min	F9901	0.06	Unit shutdown, no hazards.
T901 Pin 4 to pin 5	s-c	240	5 min	F9901	0.06	Unit shutdown, no hazards.
T901 pin 6,7 to pin 8,9	s-c	240	10 min	F9901	0.03	Unit shutdown, no hazards.
T901 pin 8,9 to pin 10	s-c	240	5 min	F9901	0.06	Unit shutdown, no hazards.
BD9902 pin 1-3	s-c	240	<1 sec	F9901	--	F9901 opened instantly, no hazards.
D801	s-c	240	<1 sec	F9901	0.02	Unit shutdown, no hazards.
U901 pin 5-4	s-c	240	5 min	F9901	0.02	Unit shutdown, no hazards.
U901 pin 5-1	s-c	240	5 min	F9901	0.05	Unit shutdown, no hazards.
U901 pin 6-1	s-c	240	5 min	F9901	0.05	Unit shutdown, no hazards.
U902 Pin 1-2	s-c	240	10 min	F9901	0.05	Unit shutdown, no hazards.
U902 Pin 3-4	s-c	240	10 min	F9901	0.05	Unit shutdown, no hazards.
U902 Pin 1	o-c	240	10 min	F9901	0.05	Unit shutdown, no hazards.
Q9101 pin G-S	s-c	240	5 min	F9901	0.04	Unit shut down, no hazard
Q1901 pin D-G [4)]	s-c	240	5 min	F9901	0.04	Q901, R909 damaged. No hazards.
Q9101 pin D-S	s-c	240	5 min	F9901	0.04	Q901, R914 damaged. No hazards.
+16V to earth	s-c	240	5 min	F9901	0.04	Unit shutdown, no hazards.
+5V to earth	s-c	240	5 min	F9901	0.04	Unit shutdown, no hazards.
D910	s-c	240	5 min	F9901	0.04	Unit shutdown, no hazards.
Overload +16V after F801	o-l	240	8.5hrs	F9901	0.42	Max. Measured temp.in T901 coil=91.1°C, T901 core=86.7°C, U902= 67.8°C, ambient= 20.8°C, before shut down winding is loaded to 3.0A. No damage, no hazards.

IEC 60950-1			
Clause	Requirement + Test	Result - Remark	Verdict

Overload +5V after F901	o-l	240	8.5hrs	F9901	0.41	Max. Measured temp.in T901 coil=88.6°C, T901 core=83.7°C, U902= 65.5°C, ambient= 20.7°C, before shut down winding is loaded to 7.1A. No damage, no hazards.
Ventilation openings for 23.6 inch models	blocked	240	4.9hrs	F9901	0.28	Max. Measured temp.in T901 coil=55.1°C, T901 core=52.9°C, U902= 40.5°C, ambient=21.3°C. No damage, no hazards.
Ventilation openings for 27 inch models	blocked	240	4.9hrs	F9901	0.28	Max. Measured temp.in T901 coil=58.3°C, T901 core=55.1°C, U902= 41.7°C, ambient=19.3°C. No damage, no hazards.
Speaker	s-c	240	2hrs	F9901	0.20	Max. Measured temp.in T901 coil=53.3°C, T901 core=50.8°C, U902=38.1°C, ambient=20.6°C. No damage, no hazards.

Supplementary information:

1. The unit passed 3000V hi-pot test between primary and accessible output connector after single fault test above.
2. In fault column, where s-c=short-circuited, o-c=open-circuited, o-l = overload.
3. For fuse opened conditions were tested with each source of fuse.
4. For component damaged conditions have been repeated twice (three tests total) with same result.
5. Temp. limit of transformer according to table C.1 is 175°C -10°C-(40°C –Tamb).

IEC 60950-1			
Clause	Requirement + Test	Result - Remark	Verdict

C.2	**Safety isolation transformer**		**P**
	Construction details:		
Transformer part name: T901			
Manufacturer: See appended table 1.5.1			
Type: See appended table 1.5.1			
Constructions of all sources of T901 are identical each other, except for model designation, manufacturer and materials difference.			
For T901 used on power board			
Recurring peak voltage	500V		
Required clearance for reinforced insulation (from table 2H and 2J)	6.6mm		
Effective voltage rms	260V		
Required creepage distance for reinforced insulation (from table 2L)	6.6mm		
Measured min. creepage distance			
Location	inside (mm)	outside (mm)	
prim-sec	Triple insulation wire provided for sec. windings.	42.5mm (between primary and secondary solder pins.)	
prim-core	--	--	
sec-core	Triple insulation wire provided for sec. windings.	11.1mm (between secondary solder pin and core.)	
Measured min. clearances			
Location	inside (mm)	outside (mm)	
prim-sec	Triple insulation wire provided for sec. windings.	42.5mm (between primary and secondary solder pins.)	
prim-core	--	--	
sec-core	Triple insulation wire provided for sec. windings.	11.1mm (between secondary solder pin and core.)	

IEC 60950-1			
Clause	Requirement + Test	Result - Remark	Verdict

Construction:

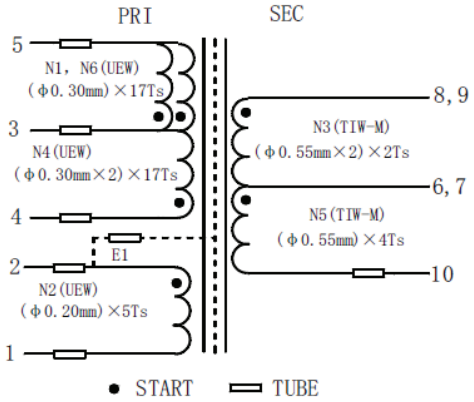

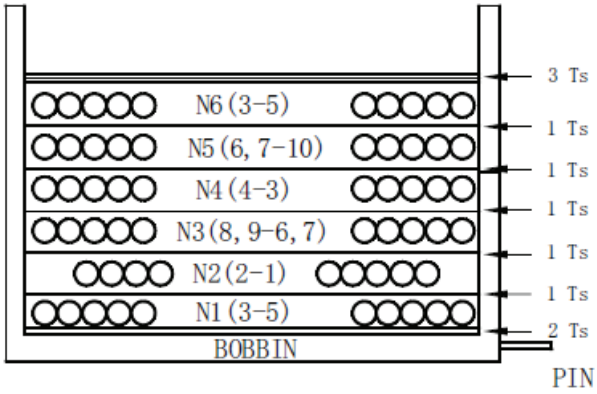

No.	COIL	TERMINAL	WIRE GAUGE	WIRE TYPE	TUNS	WINDING METHOD	TAPE 2Ts
1	N1	3--5	φ0.30 mm	UEW	17	CLOSED	1Ts
2	N2	2--1	φ0.20 mm	UEW	5	CLOSED	1Ts
3	N3	8,9--6,7	φ0.55 mm×2	TIW-M	2	CLOSED	1Ts
4	N4	4--3	φ0.30 mm×2	UEW	17	CLOSED	1Ts
5	N5	6,7--10	φ0.55 mm	TIW-M	4	CLOSED	1Ts
6	N6	3--5	φ0.30 mm	UEW	17	CLOSED	3Ts

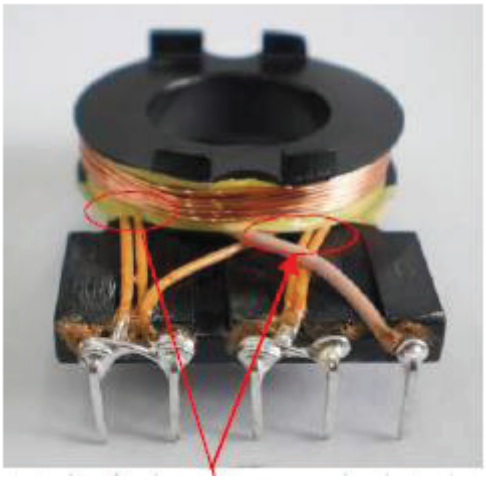

Concentric windings on bobbin (horizontal type core). Three layers of insulation tape around the outer winding and the outer winding is primary. Triple insulated wire used for secondary windings. The core is considered as primary part.

Pin numbers		
Prim.	Pin 1-2; Pin 3-4-5	
Sec.	Pin 8,9-6,7-10	
Bobbin		
Material	See table 1.5.1.	
Thickness	Min. 0.45mm	

IEC 60950-1			
Clause	Requirement + Test	Result - Remark	Verdict

Electric strength test		
With 3000 V a.c. after humidity treatment		
Result	Pass	