AOC

LCD Monitor
User Manual
Q32P2

www.aoc.com

©2020 AOC.All Rights Reserved

HDMI™

Safety 1
National Conventions 1
Power 2
Installation 3
Cleaning 4
Other 5

Setup 6
Contents in Box 6
Setup Stand & Base 7
Adjusting Viewing Angle 8
Connecting the Monitor 9
Wall Mounting 10

Adjusting 11
Hotkeys 11
OSD Setting 13
Luminance 14
Color Setup 15
Picture Boost 16
OSD Setup 17
Game Setting 18
Extra 19
Exit 20
LED Indicator 21

Troubleshoot 22

Specification 23
General Specification 23
Preset Display Modes 24
Pin Assignments 25
Plug and Play 26

Safety

National Conventions

The following subsections describe notational conventions used in this document.

Notes, Cautions, and Warnings

Throughout this guide, blocks of text may be accompanied by an icon and printed in bold type or in italic type. These blocks are notes, cautions, and warnings, and they are used as follows:

NOTE: A NOTE indicates important information that helps you make better use of your computer system.

CAUTION: A CAUTION indicates either potential damage to hardware or loss of data and tells you how to avoid the problem.

WARNING: A WARNING indicates the potential for bodily harm and tells you how to avoid the problem. Some warnings may appear in alternate formats and may be unaccompanied by an icon. In such cases, the specific presentation of the warning is mandated by regulatory authority.

Power

The monitor should be operated only from the type of power source indicated on the label. If you are not sure of the type of power supplied to your home, consult your dealer or local power company.

The monitor is equipped with a three-pronged grounded plug, a plug with a third (grounding) pin. This plug will fit only into a grounded power outlet as a safety feature. If your outlet does not accommodate the three-wire plug, have an electrician install the correct outlet, or use an adapter to ground the appliance safely. Do not defeat the safety purpose of the grounded plug.

Unplug the unit during a lightning storm or when it will not be used for long periods of time. This will protect the monitor from damage due to power surges.

Do not overload power strips and extension cords. Overloading can result in fire or electric shock.

To ensure satisfactory operation, use the monitor only with UL listed computers which have appropriate configured receptacles marked between 100-240V AC, Min. 5A.

The wall socket shall be installed near the equipment and shall be easily accessible.

Installation

Do not place the monitor on an unstable cart, stand, tripod, bracket, or table. If the monitor falls, it can injure a person and cause serious damage to this product. Use only a cart, stand, tripod, bracket, or table recommended by the manufacturer or sold with this product. Follow the manufacturer's instructions when installing the product and use mounting accessories recommended by the manufacturer. A product and cart combination should be moved with care.

Never push any object into the slot on the monitor cabinet. It could damage circuit parts causing a fire or electric shock. Never spill liquids on the monitor.

Do not place the front of the product on the floor.

If you mount the monitor on a wall or shelf, use a mounting kit approved by the manufacturer and follow the kit instructions.

Leave some space around the monitor as shown below. Otherwise, air-circulation may be inadequate hence overheating may cause a fire or damage to the monitor.

To avoid potential damage, for example the panel peeling from the bezel, ensure that the monitor does not tilt downward by more than -5 degrees. If the -5 degree downward tilt angle maximum is exceeded, the monitor damage will not be covered under warranty.

See below the recommended ventilation areas around the monitor when the monitor is installed on the wall or on the stand:

Installed with stand

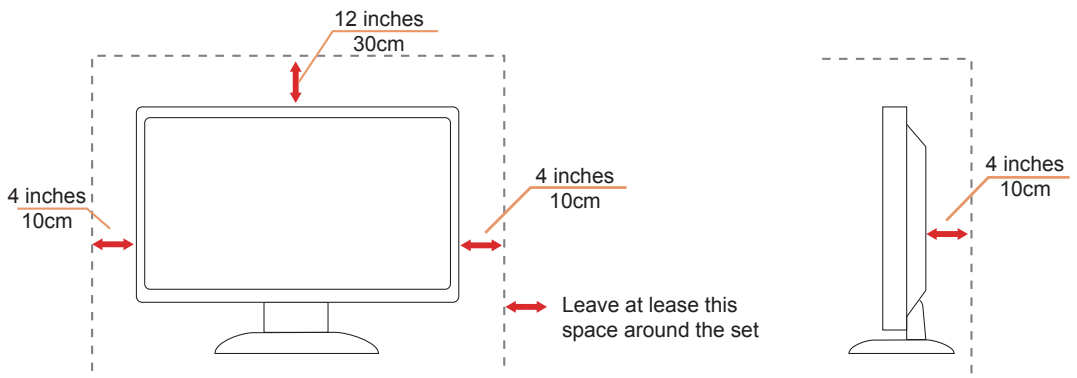

Cleaning

Clean the cabinet regularly with cloth. You can use soft-detergent to wipe out the stain, instead of strong-detergent which will cauterize the product cabinet.

When cleaning, make sure no detergent is leaked into the product. The cleaning cloth should not be too rough as it will scratch the screen surface.

Please disconnect the power cord before cleaning the product.

Other

If the product is emitting a strange smell, sound or smoke, disconnect the power plug IMMEDIATELY and contact a Service Center.

Make sure that the ventilating openings are not blocked by a table or curtain.

Do not engage the LCD monitor in severe vibration or high impact conditions during operation.

Do not knock or drop the monitor during operation or transportation.

The power cords shall be safety approved. For Germany, it shall be H03VV-F, 3G, 0.75 mm2, or better. For other countries, the suitable types shall be used accordingly.

Excessive sound pressure from earphones and headphones can cause hearing loss. Adjustment of the equalizer to maximum increases the earphones and headphones output voltage and therefore the sound pressure level.

Setup

Contents in Box

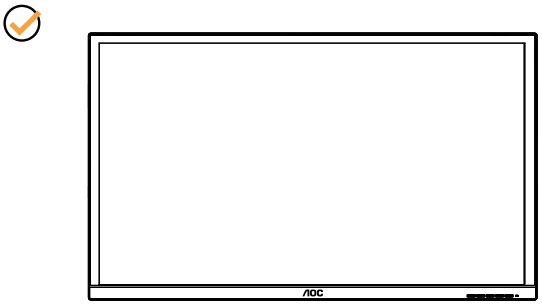

Monitor

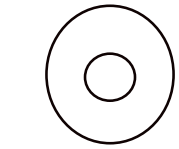

CD Manual

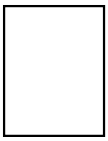

Warranty Card

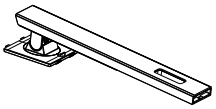

Stand

Base

Power Cable

HDMI Cable

USB Cable

DP Cable

★Not all signal cables will be provided for all countries and regions. Please check with the local dealer or AOC branch office for confirmation.

Setup Stand & Base

Please setup or remove the base following the steps as below.

Setup:

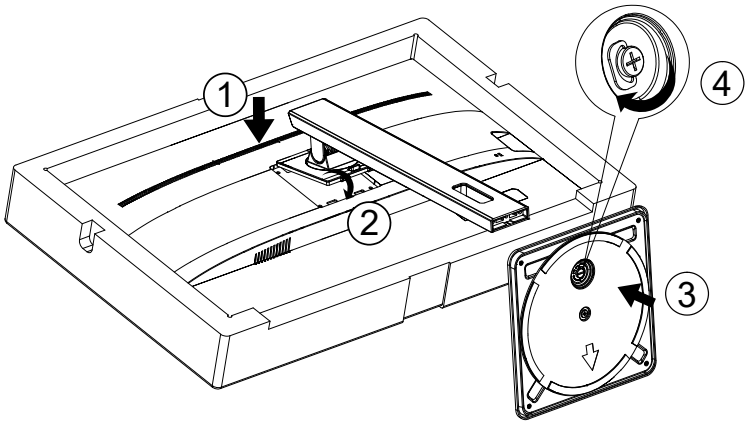

Remove:

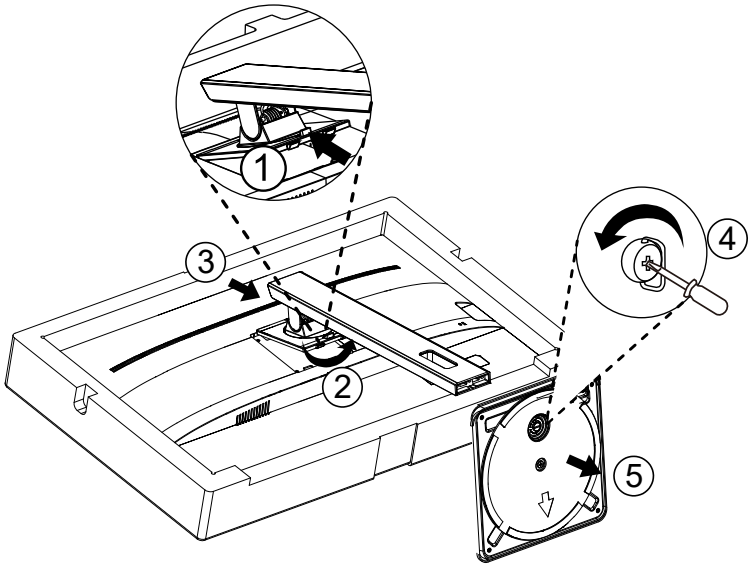

Adjusting Viewing Angle

For optimal viewing it is recommended to look at the full face of the monitor, then adjust the monitor's angle to your own preference.
Hold the stand so you will not topple the monitor when you change the monitor's angle.
You are able to adjust the monitor as below:

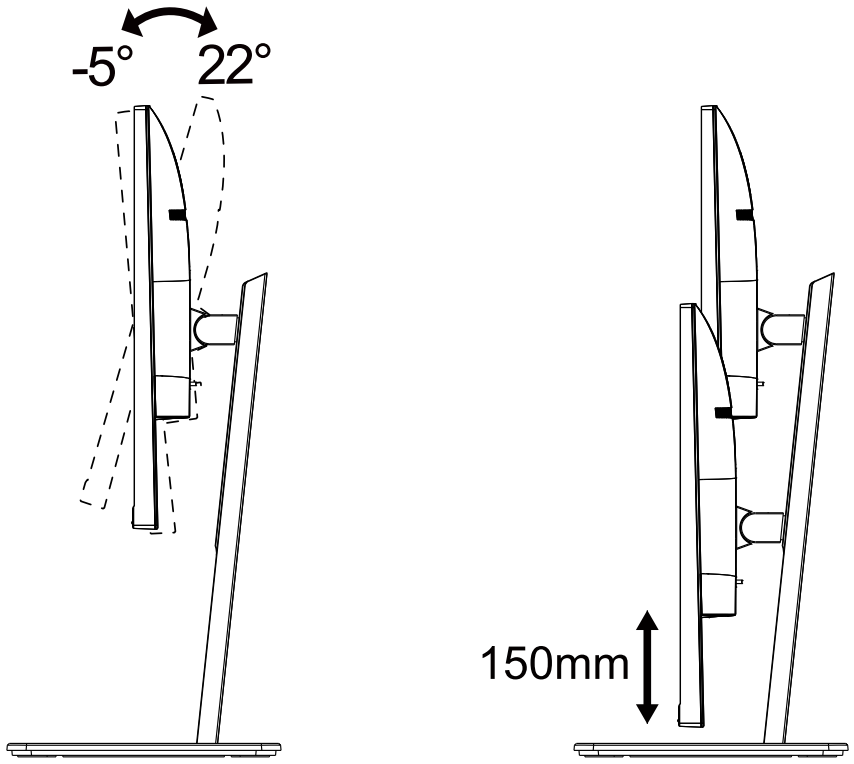

NOTE:

Do not touch the LCD screen when you change the angle. It may cause damage or break the LCD screen.

WARNING:

1. To avoid potential screen damage, such as panel peeling, ensure that the monitor does not tilt downward by more than -5 degrees.
2. Do not press the screen while adjusting the angle of the monitor. Grasp only the bezel.

Connecting the Monitor

Cable Connections In Back of Monitor and Computer:

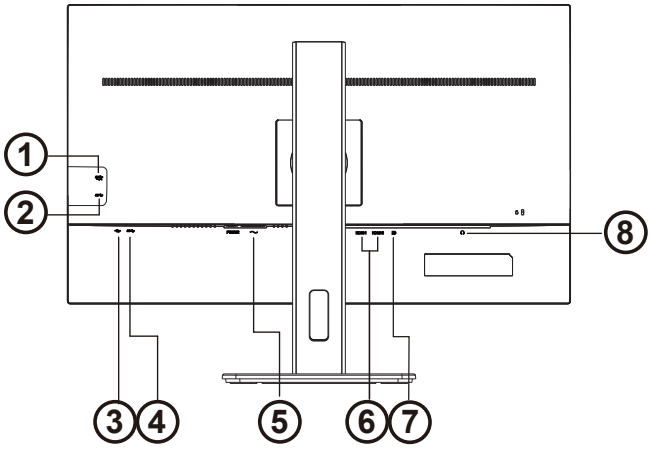

1. USB3.2 Gen1+charging
2. USB3.2 Gen1
3. USB-PC(USB upstream)
4. USB3.2 Gen1
5. Power
6. HDMI x 2
7. DP
8. Earphone

Connect to PC

1. Connect the power cord to the back of the display firmly.
2. Turn off your computer and unplug its power cable.
3. Connect the display signal cable to the video connector on the back of your computer.
4. Plug the power cord of your computer and your display into a nearby outlet.
5. Turn on your computer and display.

If your monitor displays an image, installation is complete. If it does not display an image, please refer Troubleshooting.

To protect equipment, always turn off the PC and LCD monitor before connecting.

Wall Mounting

Preparing to Install An Optional Wall Mounting Arm.

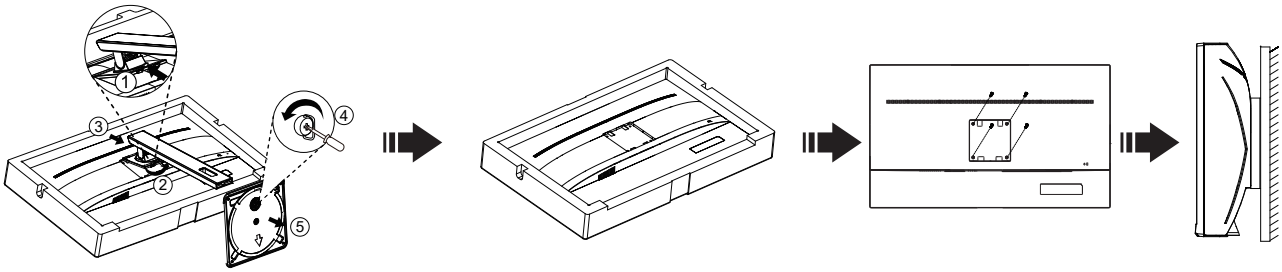

This monitor can be attached to a wall mounting arm you purchase separately. Disconnect power before this procedure. Follow these steps:

1. Remove the base.
2. Follow the manufacturer's instructions to assemble the wall mounting arm.
3. Place the wall mounting arm onto the back of the monitor. Line up the holes of the arm with the holes in the back of the monitor.
4. Insert the 4 screws into the holes and tighten.
5. Reconnect the cables. Refer to the user's manual that came with the optional wall mounting arm for instructions on attaching it to the wall.

Noted: VESA mounting screw holes are not available for all models, please check with the dealer or official department of AOC.

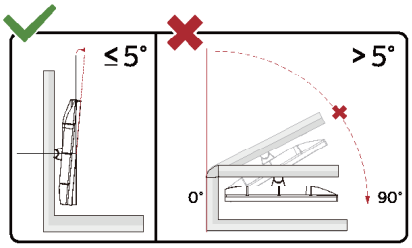

* Display design may differ from those illustrated.

WARNING:

1. To avoid potential screen damage, such as panel peeling, ensure that the monitor does not tilt downward by more than -5 degrees.
2. Do not press the screen while adjusting the angle of the monitor. Grasp only the bezel.

Adjusting

Hotkeys

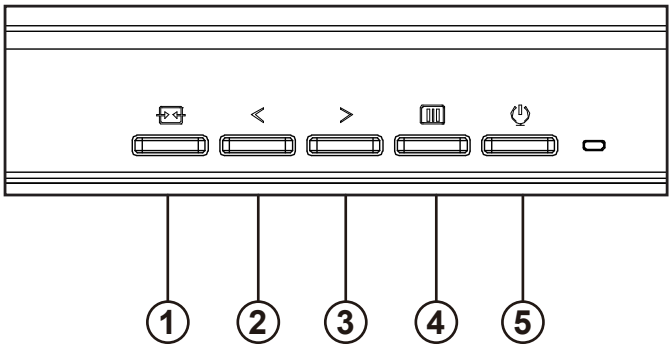

1	Source/Exit
2	Clear Vision/<
3	Volume/>
4	Menu/Enter
5	Power

Power
Press the power key to turn on/off the monitor.

Menu/Select
Activate the OSD menu or function adjustment confirmation.

Volume / increase
When the OSD menu is closed, press the “>” key to open the volume adjustment bar, and press the “<” or “>” key to adjust the headphone output volume.

Source switching/exit
When the OSD menu is off, press this key to activate the signal source switching function, press this key continuously to select the signal source displayed in the information bar, and press the menu key to adjust to the selected signal source. When the OSD menu is active, this button acts as an exit key (to exit the OSD menu)

Clear Vision

1. When there is no OSD, Press the “<” button to activate Clear Vision.
2. Use the “<” or “>” buttons to select between weak, medium, strong, or off settings. Default setting is always “off”.

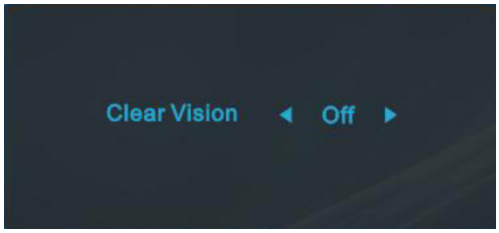

3. Press and hold “<” button for 5 seconds to activate the Clear Vision Demo, and a message of “Clear Vision Demo: on” will be display on the screen for a duration of 5 seconds. Press Menu or Exit button, the message will disappear. Press and hold “<” button for 5 seconds again, Clear Vision Demo will be off.

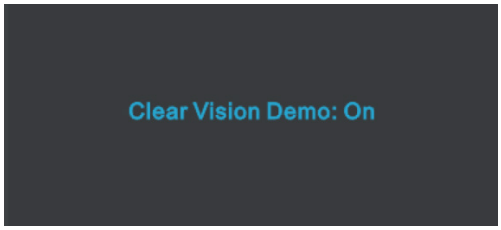

4. Clear Vision function provides the best image viewing experience by converting low resolution and blurry images into clear and vivid images.

Clear Vision	Off	Adjust the Clear Vision
	Weak	
	Medium	
	Strong	
Clear Vision Demo	On or Off	Disable or Enable Demo

OSD Setting

Basic and simple instruction on the control keys.

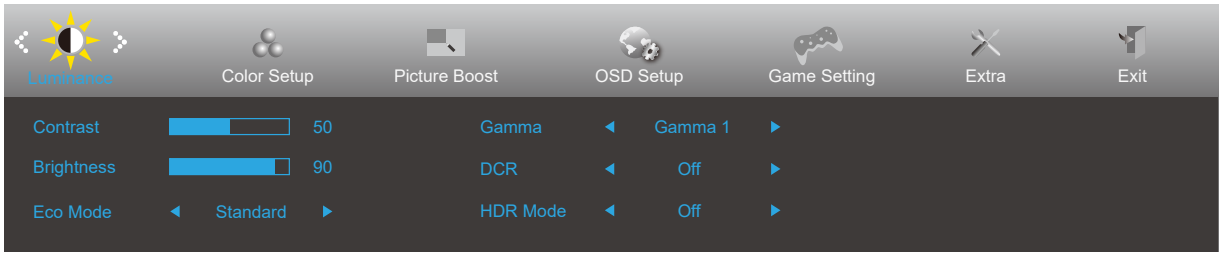

1). Press the **MENU-button** to activate the OSD window.

2). Press **<** or **>** to navigate through the functions. Once the desired function is highlighted, press the **MENU-button** to activate it, press **<** or **>** to navigate through the sub-menu functions. Once the desired function is highlighted, press **MENU-button** to activate it.

3). Press **<** or **>** to change the settings of the selected function. Press **AUTO–button** to exit. If you want to adjust any other function, repeat steps 2-3.

4). OSD Lock Function: To lock the OSD, press and hold the **MENU-button** while the monitor is off and then press **power button** to turn the monitor on. To un-lock the OSD - press and hold the **MENU-button** while the monitor is off and then press **power button** to turn the monitor on.

Notes:

1). If the product has only one signal input, the item of “Input Select” is disable to adjust.

2). If the screen size of the product is 4:3 or the input signal resolution is the native resolution, then the item “Image Ratio” is invalid.

3). The four states of ECO mode (except standard mode), DCR, DCB mode and window highlight can only display one state at a time.

Luminance

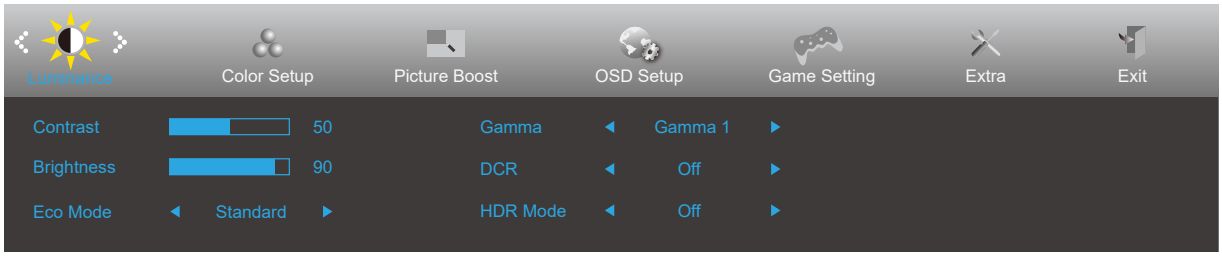

	Contrast	0-100		Contrast from Digital-register.
	Brightness	0-100		Backlight Adjustment
	Eco mode	Standard		Standard Mode
		Text		Text Mode
		Internet		Internet Mode
		Game		Game Mode
		Movie		Movie Mode
		Sports		Sports Mode
		Reading		Reading Mode
	Gamma	Gamma1		Adjust to Gamma 1
		Gamma2		Adjust to Gamma 2
		Gamma3		Adjust to Gamma 3
	DCR	Off		Disable dynamic contrast ratio
		On		Enable dynamic contrast ratio
	HDR Mode	Off		Adjust HDR Mode.
		HDR Picture		
		HDR Movie		
		HDR Game		

Note:
When “HDR Mode” is set to a non-off state, “Contrast”, “Brightness Scene Mode”, and “Gamma” items cannot be adjusted.

Color Setup

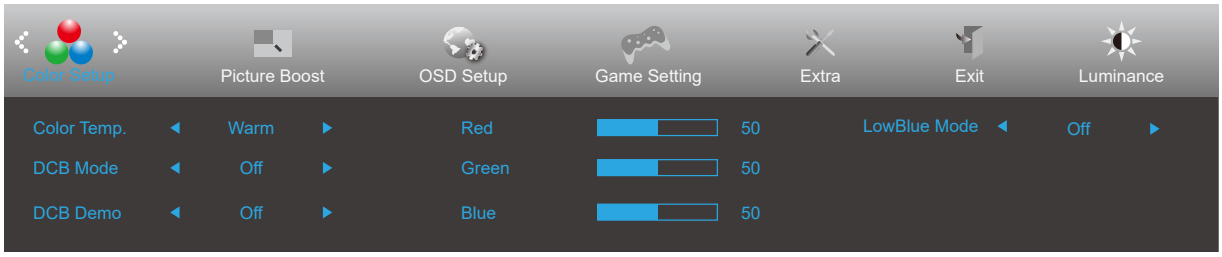

	Color Temp.	Warm	Recall Warm Color Temperature from EEPROM.
		Normal	Recall Normal Color Temperature from EEPROM.
		Cool	Recall Cool Color Temperature from EEPROM.
		sRGB	Recall SRGB Color Temperature from EEPROM.
		User	Red Gain from Digital-register.
			Green Gain Digital-register.
			Blue Gain from Digital-register.
	DCB Mode	Off	Disable DCB Mode.
		Full Enhance	Enable Full Enhance Mode.
		Nature Skin	Enable Nature Skin Mode.
		Green Field	Enable Green Field Mode.
		Sky-blue	Enable Sky-blue Mode.
		Auto Detect	Enable AutoDetect Mode.
	DCB Demo	On or Off	Disable or Enable Demo.
	Red	0-100	Red gain from Digital-register.
	Green	0-100	Green gain from Digital-register.
	Blue	0-100	Blue gain from Digital-register.
	Low Blue Mode	Off	Decrease blue light wave by controlling color temperature.
		Reading	
		Office	
		Internet	
		Multimedia	

Note:
When “HDR Mode” under “Brightness” is set to a non-off state, all items under “Color Settings” cannot be adjusted.

Picture Boost

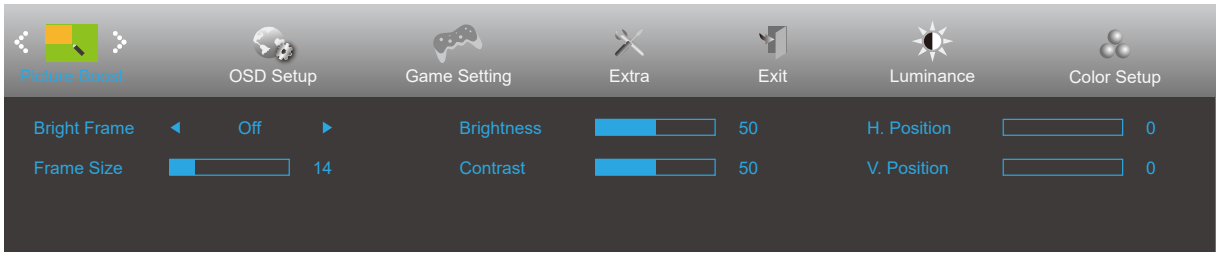

	Bright Frame	On or Off	Disable or Enable Bright Frame
	Frame Size	14-100	Adjust Frame Size
	Brightness	0-100	Adjust Frame Brightness
	Contrast	0-100	Adjust Frame Contrast
	H. position	0-100	Adjust Frame horizontal Position
	V. position	0-100	Adjust Frame vertical Position

Note:

1). For a better viewing experience, adjust the brightness, contrast, and position of the brightening.

2). When the „HDR Mode“ under „Brightness“ is set to a non-off state, all items under „Window Brightening“ cannot be adjusted.

OSD Setup

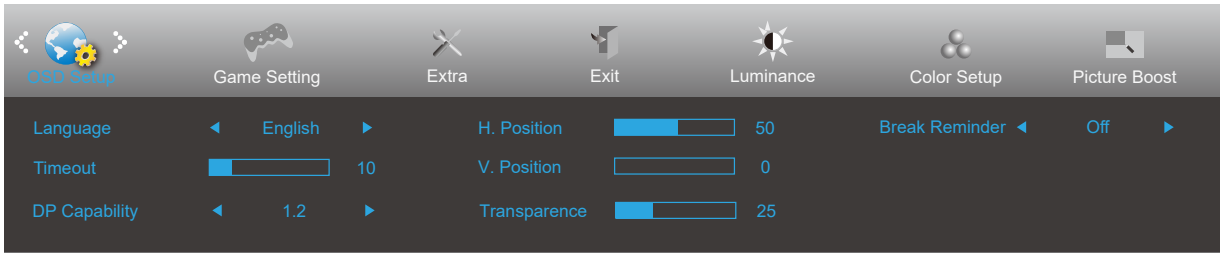

	Language		Select the OSD language
	Timeout	5-120	Adjust the OSD Timeout
	DP Capability	1.1/1.2	If the DP video content supports DP1.2, please select DP1.2 for DP Capability; otherwise, please select DP1.1
	H. Position	0-100	Adjust the horizontal position of OSD
	V. Position	0-100	Adjust the vertical position of OSD
	Transparence	0-100	Adjust the transparence of OSD
	Break Reminder	On or Off	Break reminder if the user continuously work for more than 1hrs

Game Setting

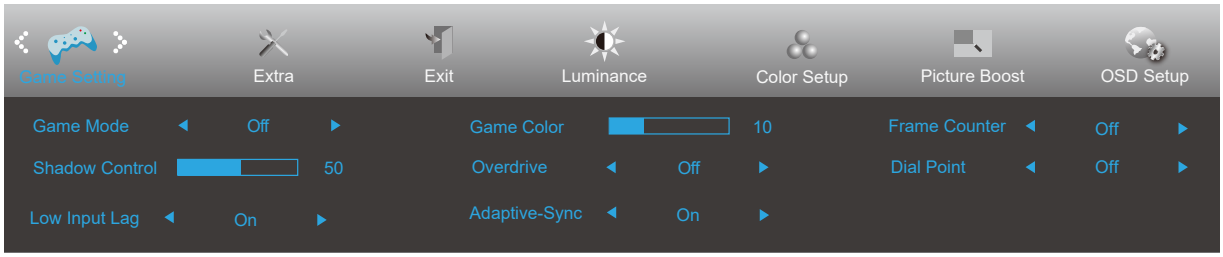

	Game Mode	Off	No optimization by Smart image game
		FPS	For playing FPS (first Person Shooters) games. Improves dark theme black level details.
		RTS	For playing RTS (Real Time Strategy). Improves the image quality.
		Racing	For playing Racing games, Provides fastest response time and high color saturation.
		Gamer 1	User's preference settings saved as Gamer 1.
		Gamer 2	User's preference settings saved as Gamer 2.
		Gamer 3	User's preference settings saved as Gamer 3.
	Shadow Control	0-100	Shadow Control Default is 50, then end-user can adjust from 50 to 100 or 0 to increase contrast for clear picture. 1. If picture is too dark to be saw the detail clearly, adjusting from 50 to100 for clear picture. 2. If picture is too white to be saw the detail clearly, adjusting from 50 to0 for clear picture
	Low Input Lag	On/Off	Turn off frame buffer to decrease input lag
	Game Color	0-20	Game Color will provide 0-20 level for adjusting saturation to get better picture.
	Overdrive	Off	Adjust the response time.
		Weak	
		Medium	
		Strong	
	Adaptive-Sync	On/Off	Adjust the Adaptive-Sync.
	Frame Counter	Off / Right-up / Right-Down / Left-Down / Left-Up	Display V frequency on the corner selected
	Dial Point	On/Off	The"Dial Point"function places an aiming indicator in the center of screen for helping gamers to play First Person Shooter (FPS) games with an accurate and precise aiming.

Note:
When the "HDR Mode" under "Brightness" is set to a non-off state, the "Game Mode", "Dark Field Control", and "Game Tone" items under "Game Settings" cannot be adjusted.

Extra

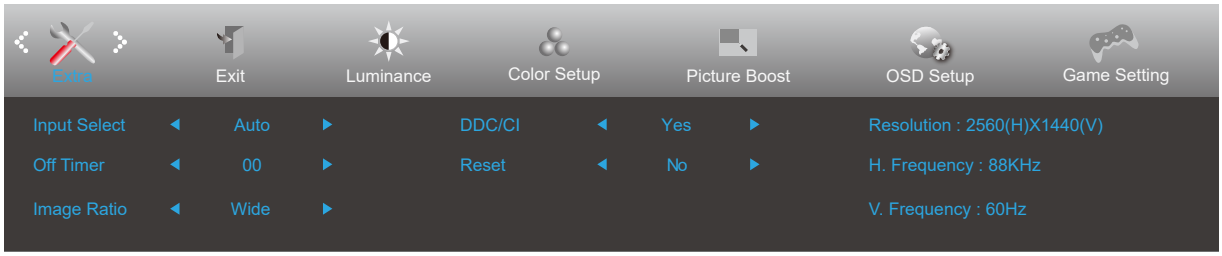

	Input Select	Auto/HDMI1/HDMI2/DP	Select Input Signal Source
	Off Timer	0-24hrs	Select DC off time
	Image Ratio	Wide	Select image ratio for display.
		4:3	
		1:1	
		Movie 1	
		Movie 2	
	DDC/CI	Yes or No	Turn On/Off DDC/CI Support
	Reset	ENERGY STAR® or No	Reset the menu to default (ENERGY STAR® available for selective models)

Exit

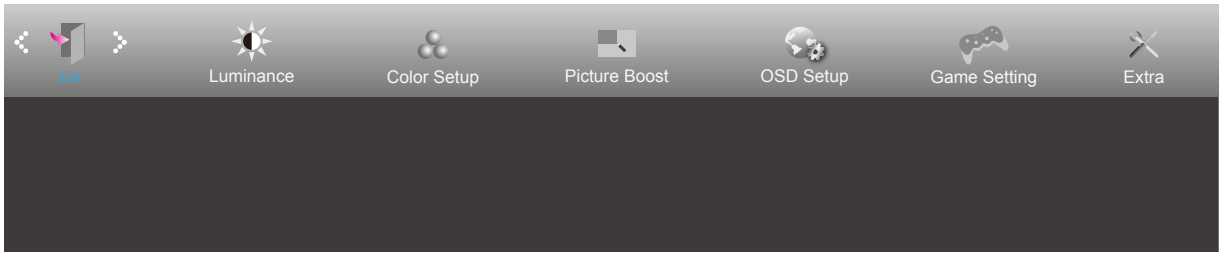

	Exit		Exit the main OSD

LED Indicator

Status	LED Color
Full Power Mode	White
Active-off Mode	Orange

Troubleshoot

Problem & Question	Possible Solutions
Power LED Is Not ON	Make sure the power button is ON and the Power Cord is properly connected to a grounded power outlet and to the monitor.
No images on the screen	• Is the power cord connected properly? Check the power cord connection and power supply. • Is the cable connected correctly? (Connected using the VGA cable) Check the VGA cable connection. (Connected using the HDMI cable) Check the HDMI cable connection. (Connected using the DP cable) Check the DP cable connection. * VGA/HDMI/DP input is not available on every model. • If the power is on, reboot the computer to see the initial screen (the login screen), which can be seen. If the initial screen (the login screen) appears, boot the computer in the applicable mode (the safe mode for Windows 7/8/10) and then change the frequency of the video card. (Refer to the Setting the Optimal Resolution) If the initial screen (the login screen) does not appear, contact the Service Center or your dealer. • Can you see “Input Not Supported” on the screen? You can see this message when the signal from the video card exceeds the maximum resolution and frequency that the monitor can handle properly. Adjust the maximum resolution and frequency that the monitor can handle properly. • Make sure the AOC Monitor Drivers are installed.
Picture Is Fuzzy & Has Ghosting Shadowing Problem	Adjust the Contrast and Brightness Controls. Press to auto adjust. Make sure you are not using an extension cable or switch box. We recommend plugging the monitor directly to the video card output connector on the back.
Picture Bounces, Flickers Or Wave Pattern Appears In The Picture	Move electrical devices that may cause electrical interference as far away from the monitor as possible. Use the maximum refresh rate your monitor is capable of at the resolution you are using.
Monitor Is Stuck In Active Off-Mode”	The Computer Power Switch should be in the ON position. The Computer Video Card should be snugly fitted in its slot. Make sure the monitor’s video cable is properly connected to the computer. Inspect the monitor’s video cable and make sure no pin is bent. Make sure your computer is operational by hitting the CAPS LOCK key on the keyboard while observing the CAPS LOCK LED. The LED should either turn ON or OFF after hitting the CAPS LOCK key.
Missing one of the primary colors (RED, GREEN, or BLUE)	Inspect the monitor’s video cable and make sure that no pin is damaged. Make sure the monitor’s video cable is properly connected to the computer.
Screen image is not centered or sized properly	Adjust H-Position and V-Position or press hot-key (AUTO).
Picture has color defects (white does not look white)	Adjust RGB color or select desired color temperature.
Horizontal or vertical disturbances on the screen	Use Windows 7/8/10 shut-down mode to adjust CLOCK and FOCUS. Press to auto-adjust.
Regulation & Service	Please refer to Regulation & Service Information which is in the CD manual or www.aoc.com (to find the model you purchase in your country and to find Regulation & Service Information in Support page.

Specification

General Specification

Panel	Model name	Q32P2	
	Driving system	TFT Color LCD	
	Viewable Image Size	80.1 cm diagonal	
	Pixel pitch	0.2727mm(H) x 0.2727mm(V)	
Others	Horizontal scan range	30k-114kHz	
	Horizontal scan Size(Maximum)	698.112mm	
	Vertical scan range	48-75Hz	
	Vertical Scan Size(Maximum)	392.688mm	
	Max resolution	2560x1440@75Hz	
	Plug & Play	VESA DDC2B/CI	
	Power Source	100-240V~, 50/60Hz, 1.5A	
	Power Consumption	Typical(Brightness = 90,Contrast = 50)	35W
		Max. (brightness = 100, contrast =100)	≤90W
		Standby mode	⩽ 0.5W
Physical Characteristics	Input Connector	HDMI/DP/USB	
	USB	Upstream: USB Bx1 Downstream: USB3.2x3 Gen1(with 1 fast charge BC1.2)	
	Signal Cable Type	Detachable	
Environmental	Temperature	Operating	0°~ 40°
		Non-Operating	-25°~ 55°
	Humidity	Operating	10% ~ 85% (non-condensing)
		Non-Operating	5% ~ 93% (non-condensing)
	Altitude	Operating	0~ 5000 m (0~ 16404ft)
		Non-Operating	0~ 12192m (0~ 40000ft)

Preset Display Modes

STANDARD	RESOLUTION	HORIZONTAL FREQUENCY(kHz)	VERTICAL FREQUENCY(Hz)
VGA	640x480@60Hz	31.469	59.94
	640x480@72Hz	37.861	72.809
	640x480@75Hz	37.5	75
SVGA	800x600@56Hz	35.156	56.25
	800x600@60Hz	37.879	60.317
	800x600@72Hz	48.077	72.188
	800x600@75Hz	46.875	75
XGA	1024x768@60Hz	48.363	60.004
	1024x768@70Hz	56.476	70.069
	1024x768@75Hz	60.023	75.029
SXGA	1280x1024@60Hz	63.981	60.02
	1280x1024@75Hz	79.976	75.025
WXGA+	1440x900@60Hz	55.935	59.887
	1440x900@60Hz	55.469	59.901
WSXGA	1680x1050@60Hz	65.29	59.954
	1680x1050@60Hz	64.674	59.883
FHD	1920x1080@60Hz	67.5	60
QHD	2560x1440@60Hz	88.787	59.951
QHD	2560x1440@75Hz	66.636	74.968
IBM MODES			
DOS	720x400@70Hz	31.469	70.087
MAC MODES			
VGA	640x480@67Hz	35	66.667
SVGA	832x624@75Hz	49.725	74.551
XGA	1024x768@75Hz	60.241	74.927
VGA	640x480@67Hz	35	66.667
SVGA	832x624@75Hz	49.725	74.551
XGA	1024x768@75Hz	60.241	74.927

Pin Assignments

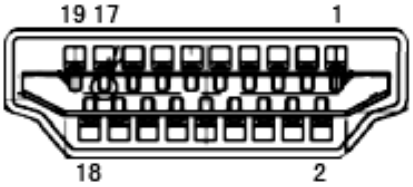

19-Pin Color Display Signal Cable

Pin No.	Signal Name	Pin No.	Signal Name	Pin No.	Signal Name
1.	TMDS Data 2+	9.	TMDS Data 0-	17.	DDC/CEC Ground
2.	TMDS Data 2 Shield	10.	TMDS Clock +	18.	+5V Power
3.	TMDS Data 2-	11.	TMDS Clock Shield	19.	Hot Plug Detect
4.	TMDS Data 1+	12.	TMDS Clock-		
5.	TMDS Data 1Shield	13.	CEC		
6.	TMDS Data 1-	14.	Reserved (N.C. on device)		
7.	TMDS Data 0+	15.	SCL		
8.	TMDS Data 0 Shield	16.	SDA		

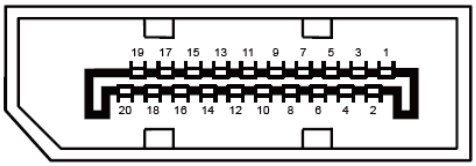

20-Pin Color Display Signal Cable

Pin No.	Signal Name	Pin No.	Signal Name
1	ML_Lane 3 (n)	11	GND
2	GND	12	ML_Lane 0 (p)
3	ML_Lane 3 (p)	13	CONFIG1
4	ML_Lane 2 (n)	14	CONFIG2
5	GND	15	AUX_CH(p)
6	ML_Lane 2 (p)	16	GND
7	ML_Lane 1 (n)	17	AUX_CH(n)
8	GND	18	Hot Plug Detect
9	ML_Lane 1 (p)	19	Return DP_PWR
10	ML_Lane 0 (n)	20	DP_PWR

Plug and Play

Plug & Play DDC2B Feature

This monitor is equipped with VESA DDC2B capabilities according to the VESA DDC STANDARD. It allows the monitor to inform the host system of its identity and, depending on the level of DDC used, communicate additional information about its display capabilities.

The DDC2B is a bi-directional data channel based on the I2C protocol. The host can request EDID information over the DDC2B channel.