REVISION TABLE							
ITEM	ECN NO.	POSITION	DESCRIPTION WORK	TO	DATE	DRAWN BY	APPROVED BY

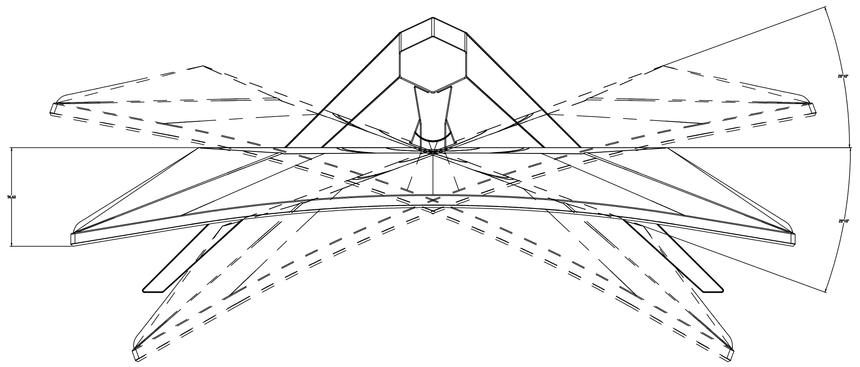

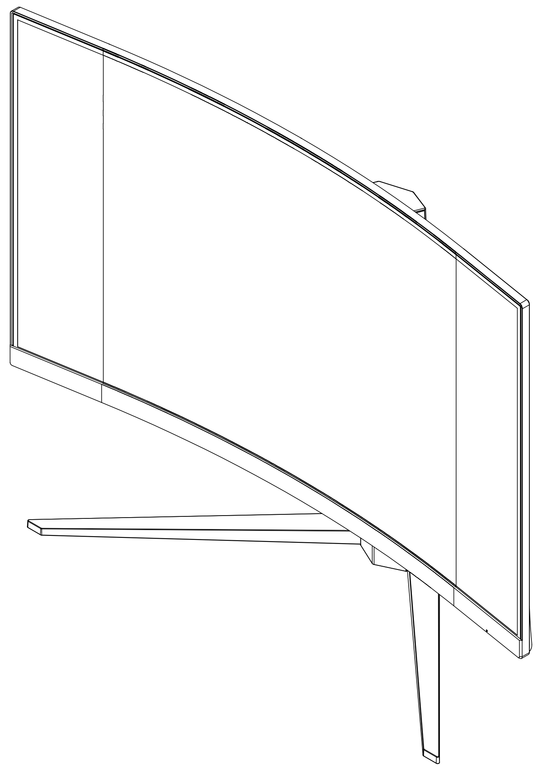

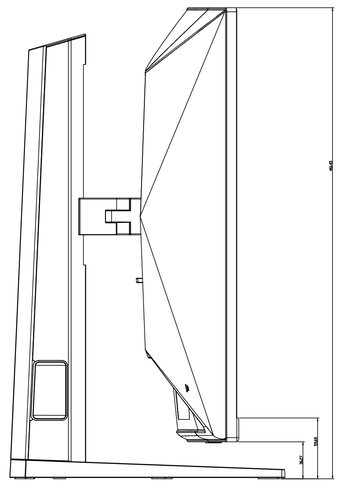

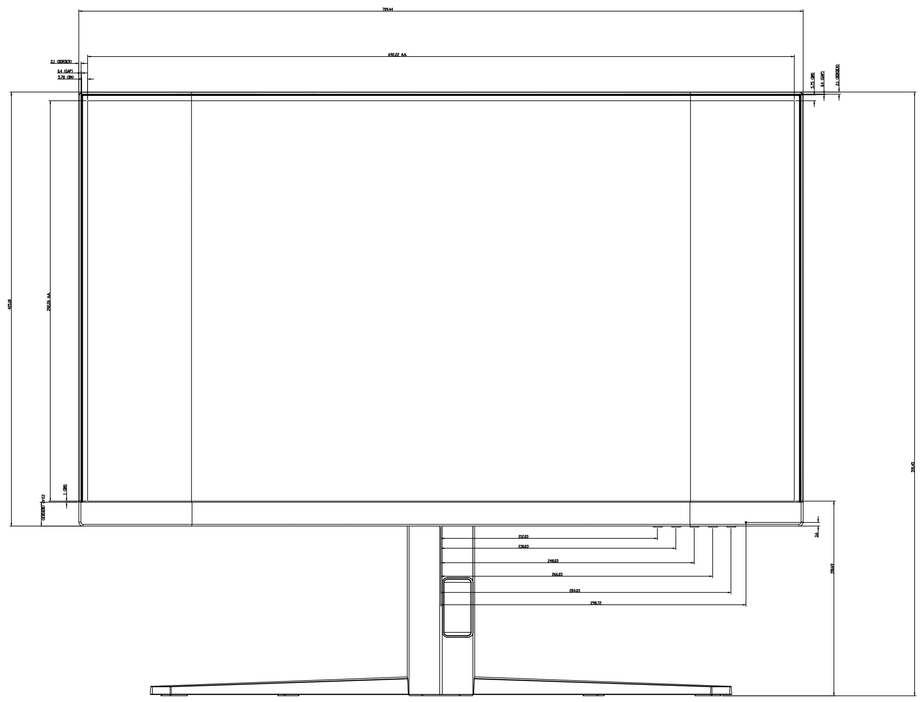

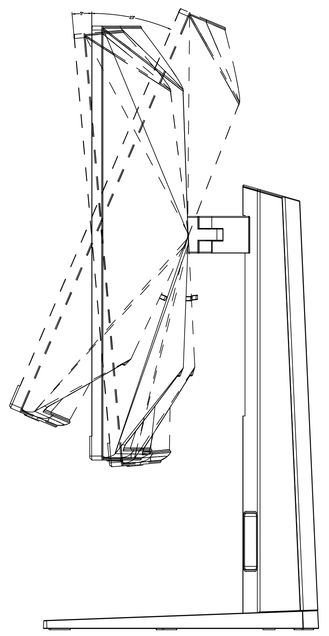

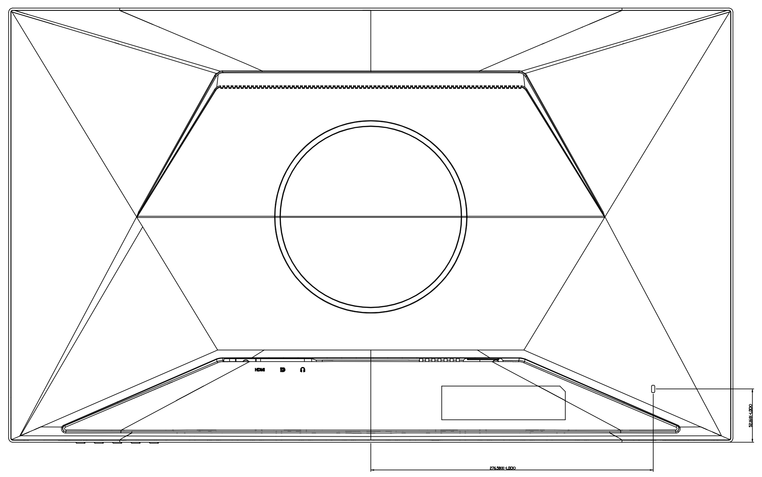

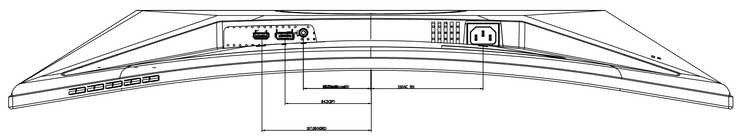

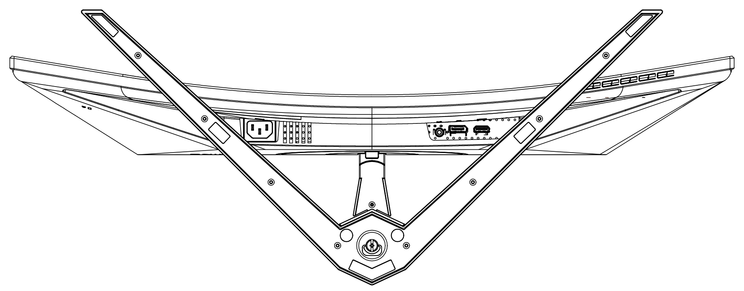

TOLERANCE UNLESS OTHERWISE SPECIFIED (mm)			
RANGE OF DIM.	METAL & PLASTIC	POLYFOAM	CARTON
0~30	±0.20	±2~3	±3~6
30~80	±0.25		
80~120	±0.30		
120~250	±0.35		
250~500	±0.50		
500~1000	±0.70		
1000~2000	±0.90		
2000~4000	±1.00		
ANGLE (EXCEPT METAL)	±1.0°		
Internal Diameter of Plastic Screw Boss	±0.05		

MATL	PRE-IN-MOLDED LOGO	PRE-IN-MOLDED LOGO	
SCALE 1.000	DO NOT SCALE DRAWING		
DRAWN		MODEL	15/18/24
DATE		DATE	

TPV TECHNOLOGY

SHEET	1
OF	1
REV	

W:\PM\TPV\MODEL\MODEL