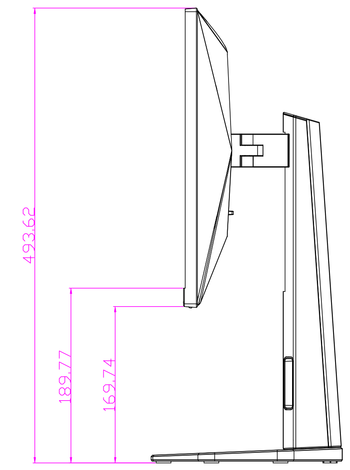

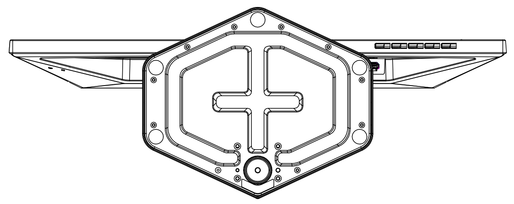

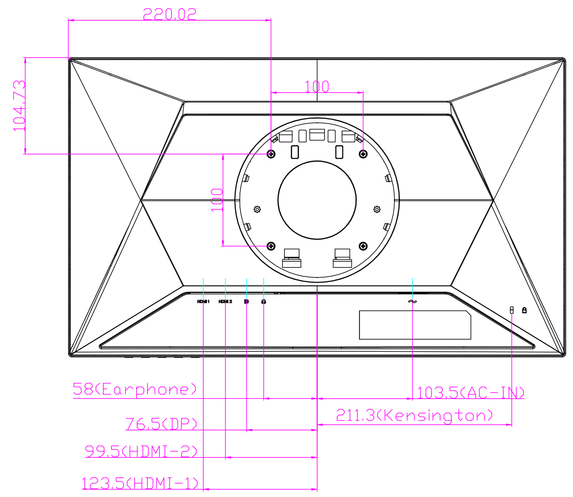

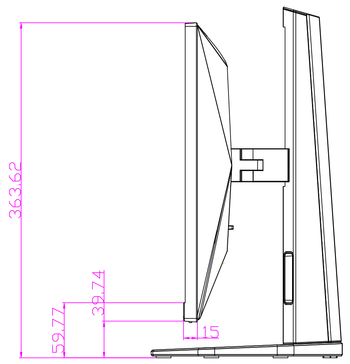

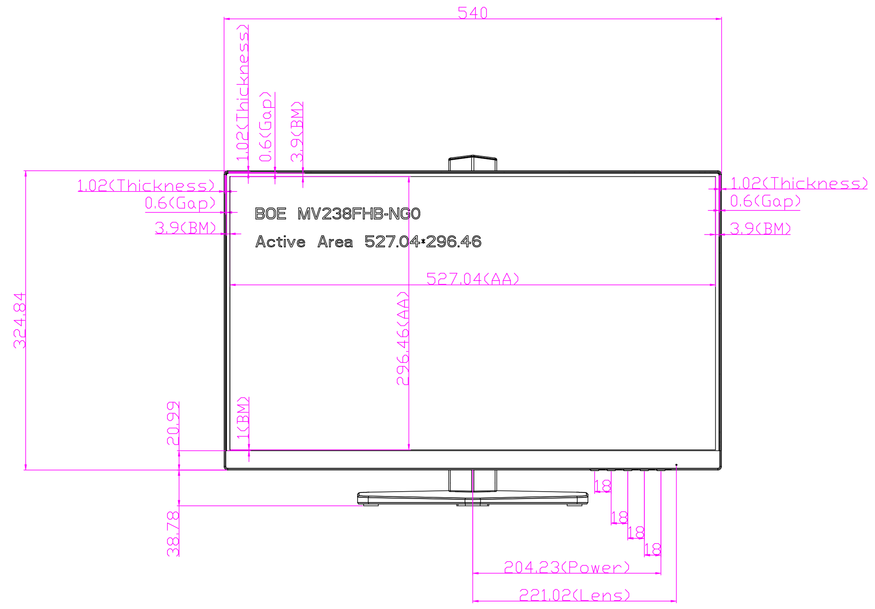

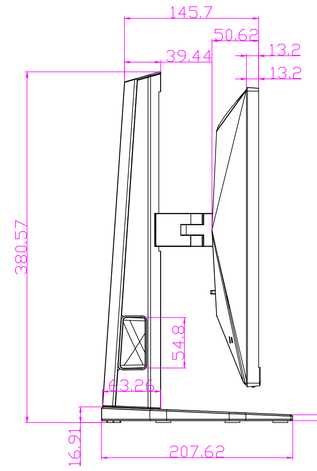

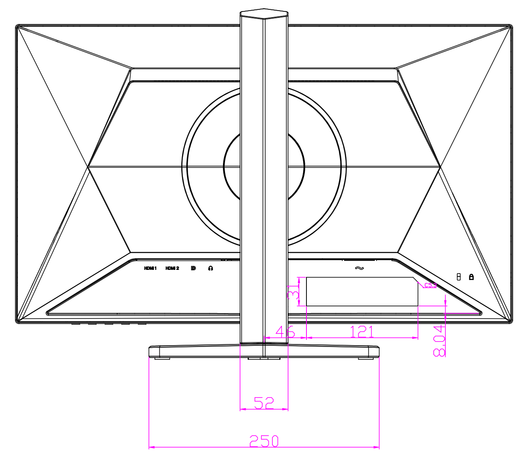

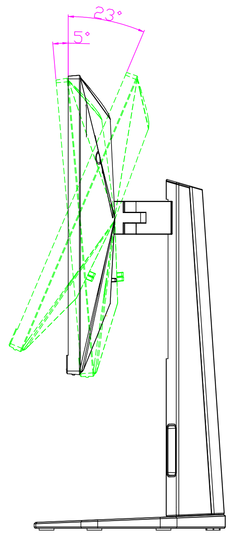

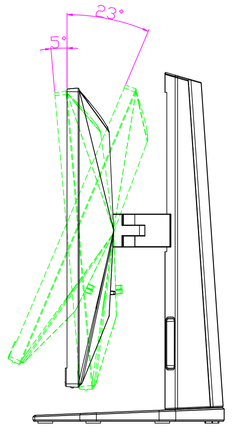

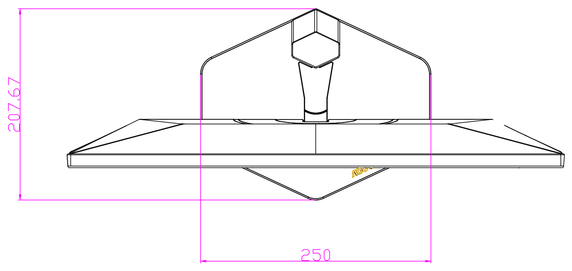

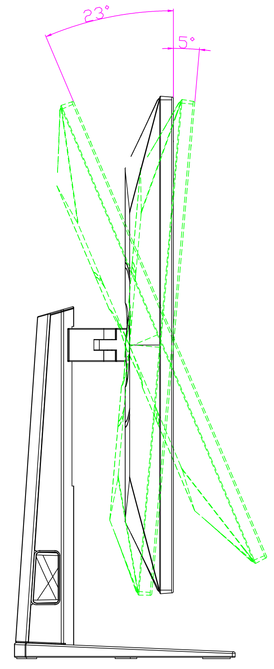

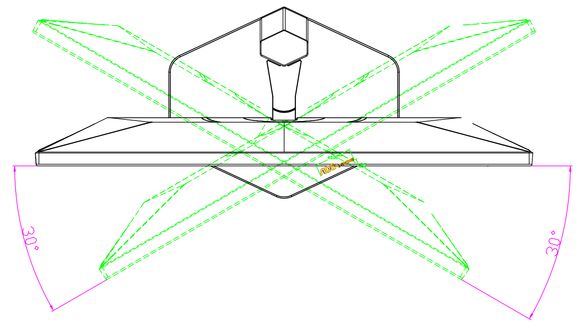

MODEL :	DRAWING :	
	24G4ZR SHT191	01UPDATE MODEL NAME
NAME Dillon.Chen	SUPERS .	
TY / CHECK	DATE 2023-07-13	