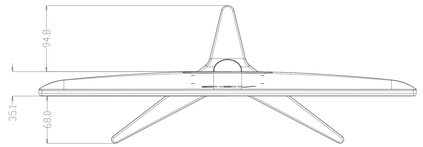

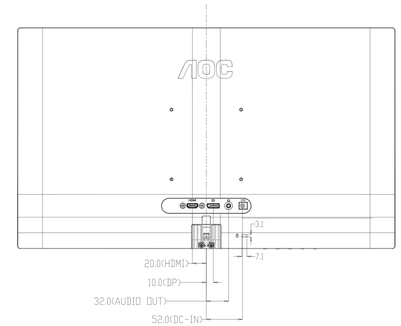

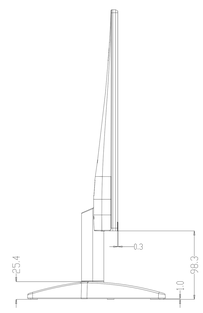

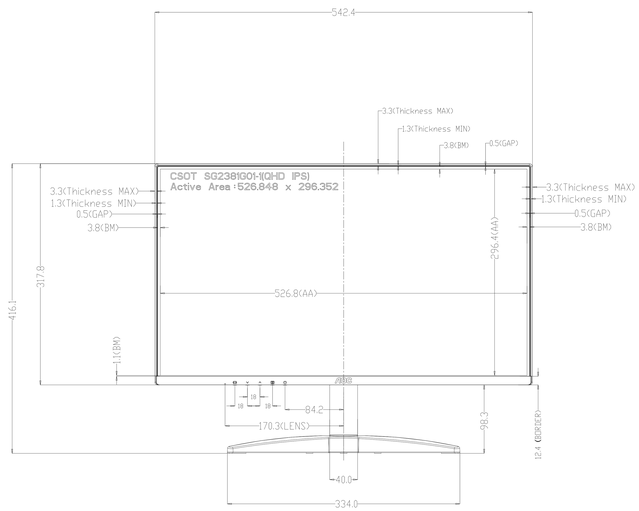

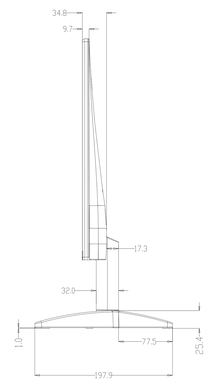

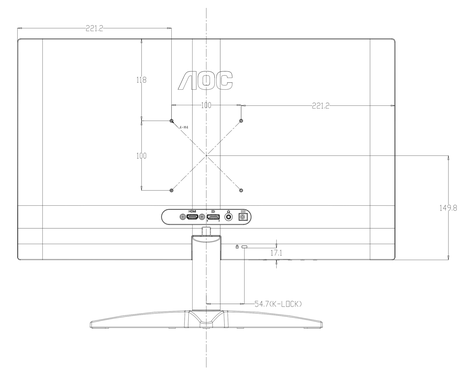

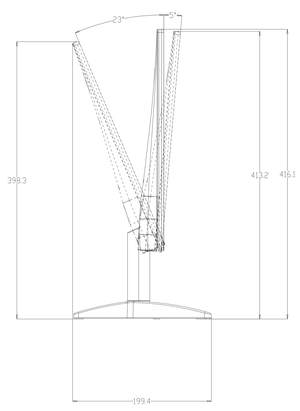

TILT:-5°~23°

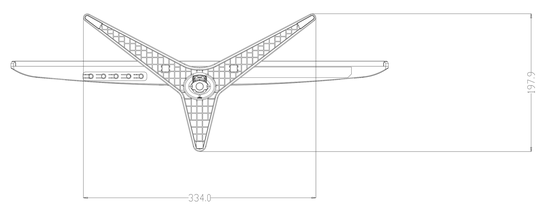

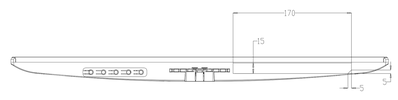

Model: Q24B36X		DrawiGLM	
Unit mm	AOC_Q24B36X_SHT191		
SCALE 1:1	3rd PROJ.	SPEC: 1.Tilt:-5°~23°	
SUPERS	AOC	1-1	
DATE 27_10_2025		TP	MNT