REVISION LIST								
ITEM	ECN NO.	POSITION	DESCRIPTION WAS	DESCRIPTION IS	DATE	UPDATED BY	APPROVED BY	

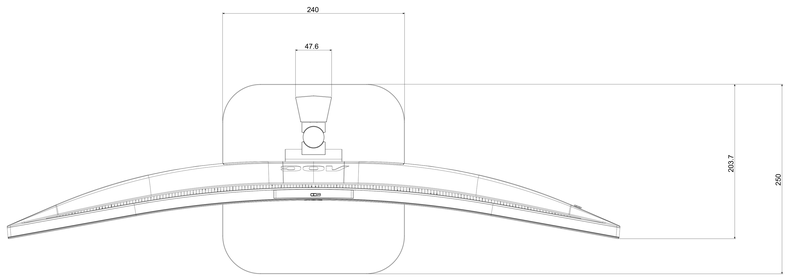

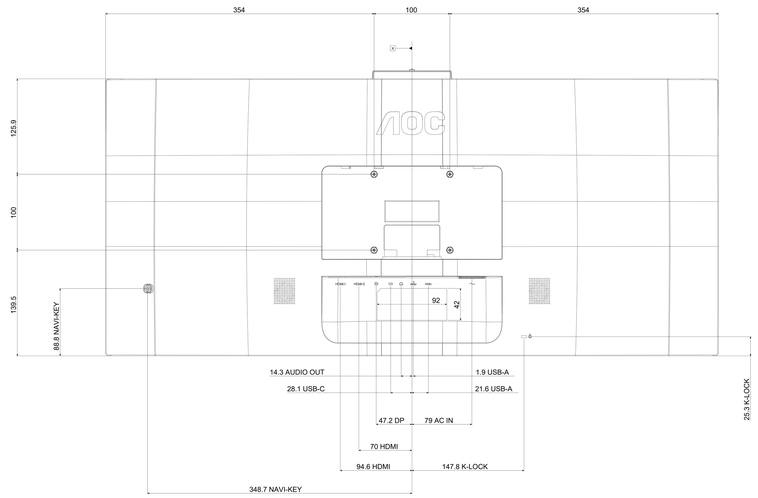

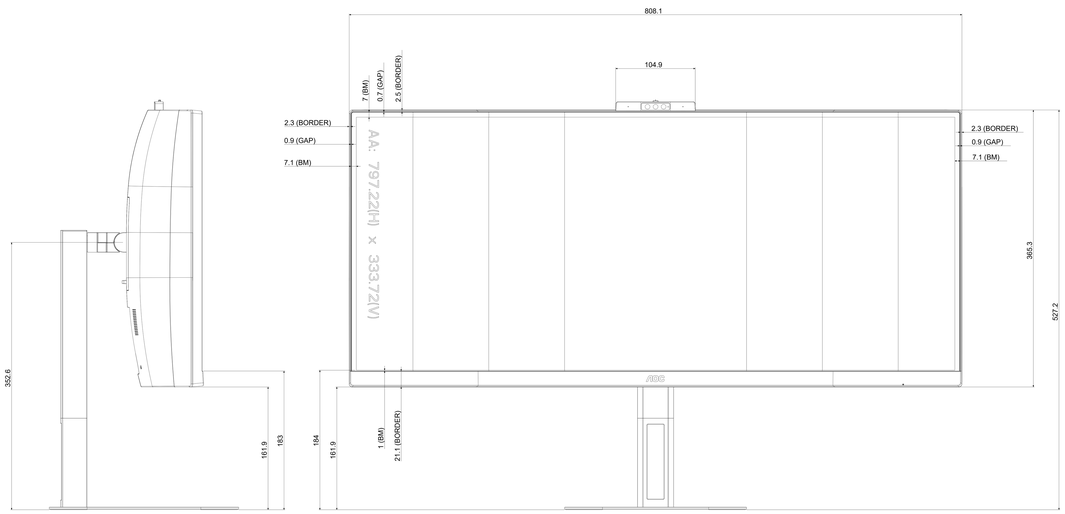

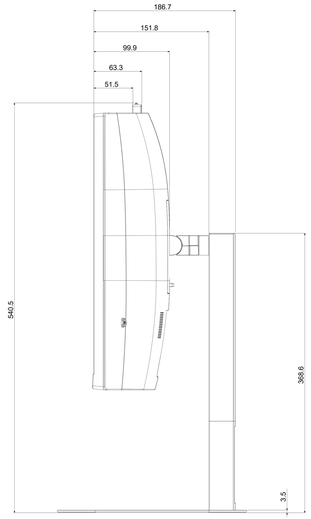

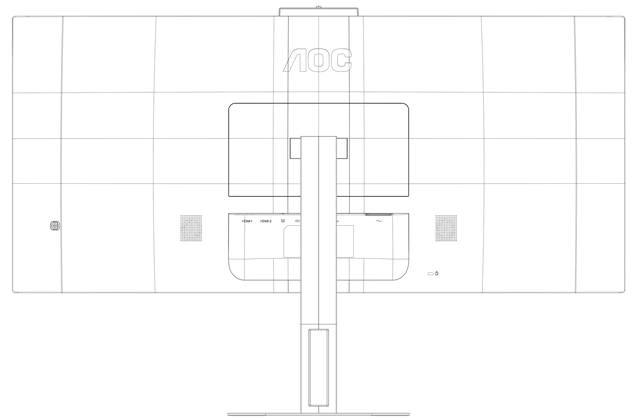

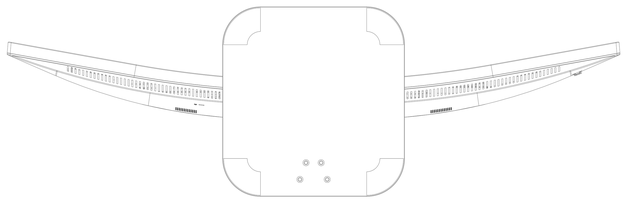

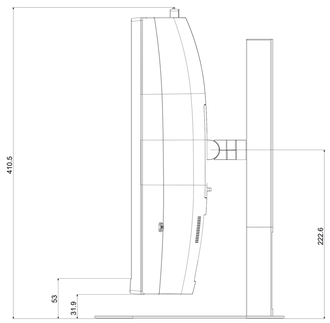

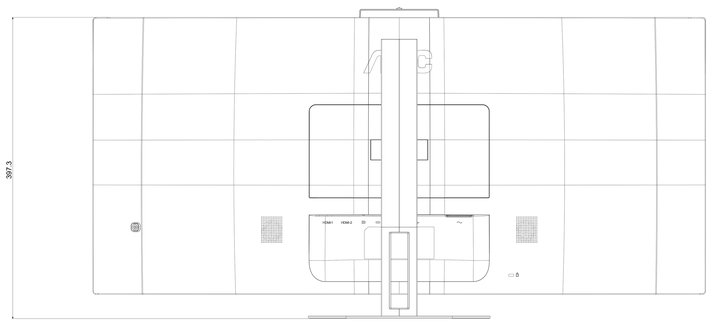

MODEL: CU34V5CW		PROE 3D: 0000_AOC_CU34V5C_ALL	PROE 2D: 0000_AOC_CU34V5C_BATTI
UNIT: mm	TOLERANCE UNLESS MENTIONED: ±0.5 DIMENSIONS ANGLE	DRAWING	
SCALE: 0.700	3rd PRO	MODEL	
AOC CU34V5CW			
DRAWN: Vince Lee	DATE:	CB Rev-01	TPV Technology Ltd
CHECK:	DATE:		1~1 1/2 TP MNT
			3D PRO_PART

RoHS