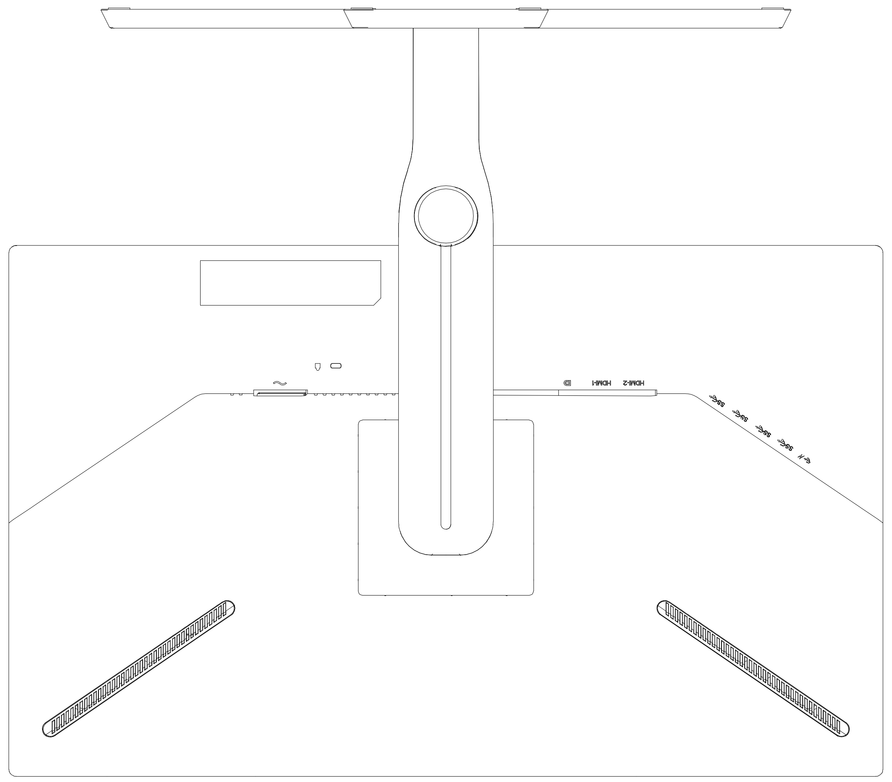
HDMI2 HDMI1 ⊟
SCALE 0,500

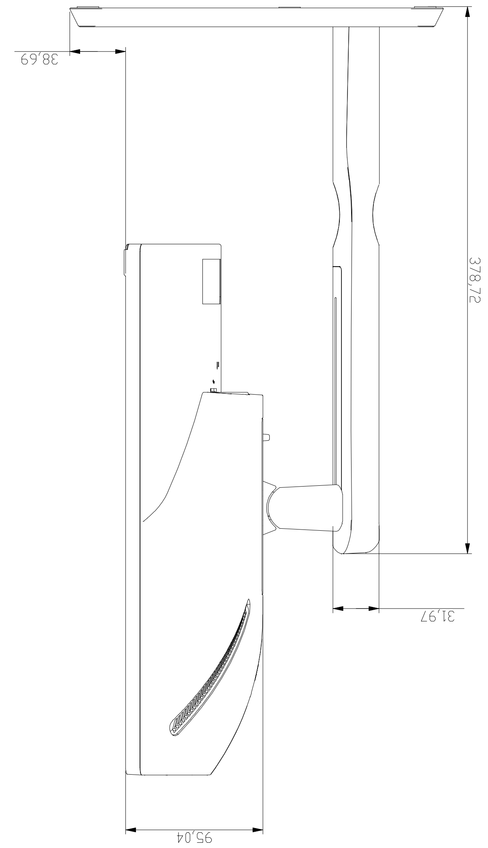
38,69
378,72
31,97
95,04
SCALE 0,500

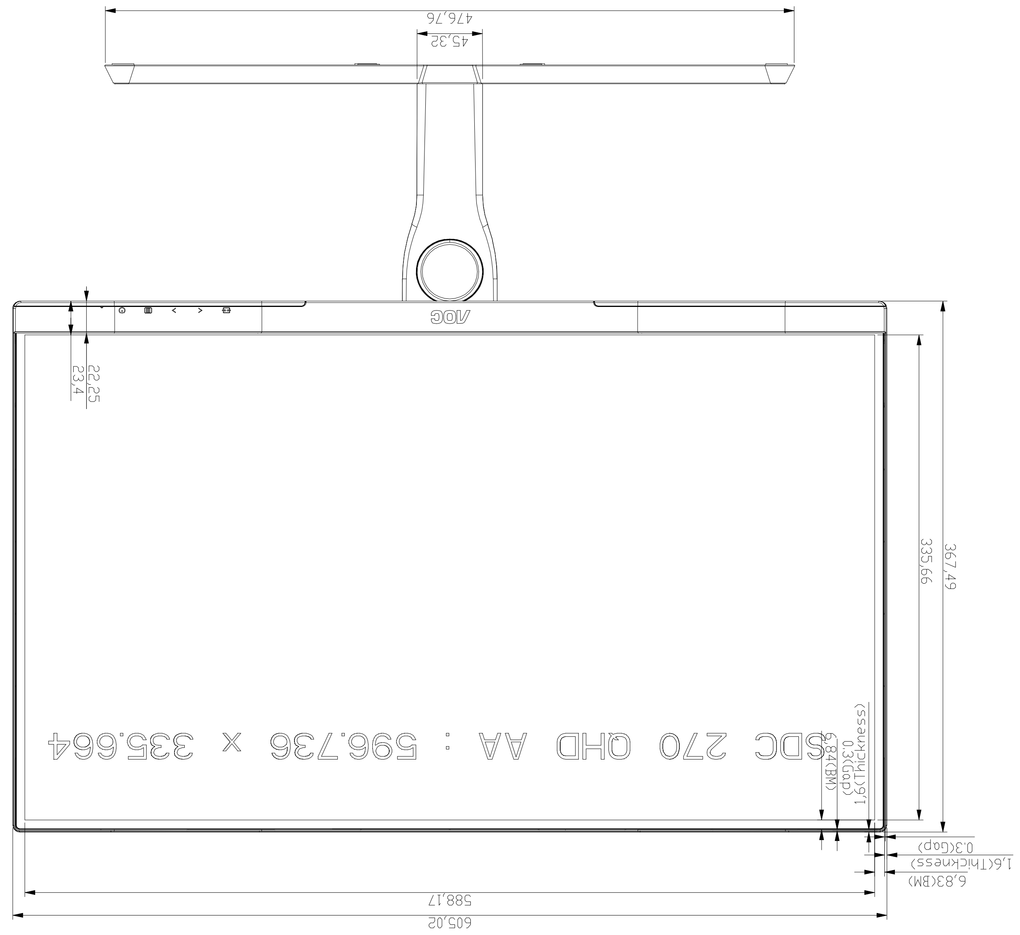
476,76
45,32
AOC
22,65
23,4
367,49
335,66
SDC 270 QHD AA : 596.736 x 335.664
(SSAXPCM)(1,9T)
0,3(GP)
5,8T(BM)
0,3(GOP)
1,6T(THICKNESS)
6,83(BM)
588,17
605,02
SCALE 0,500

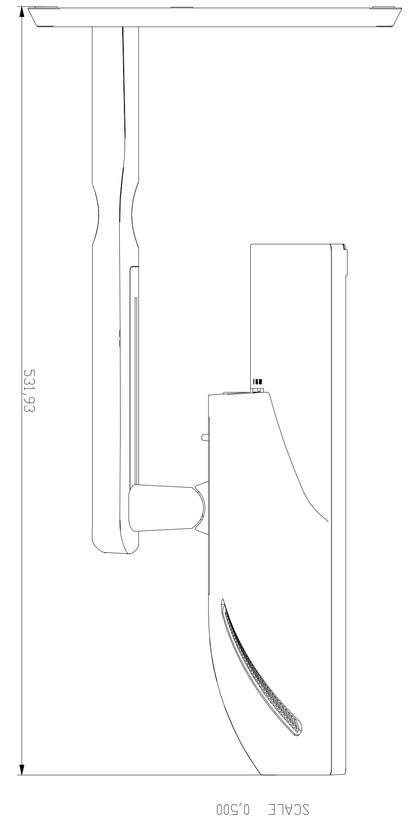
531,93
SCALE 0,500

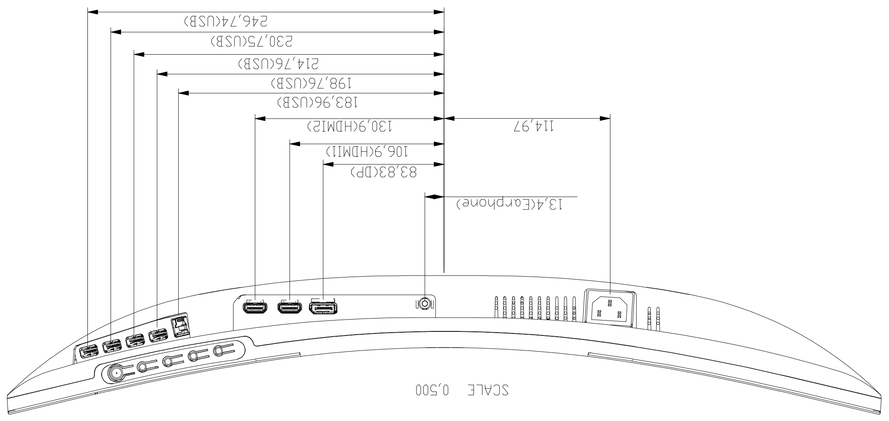
13,4(Earphone)
83,8(DP)
106,9(HDMI1)
130,9(HDMI2)
183,96(USB)
198,76(USB)
214,76(USB)
230,75(USB)
246,74(USB)
114,97
SCALE 0,500

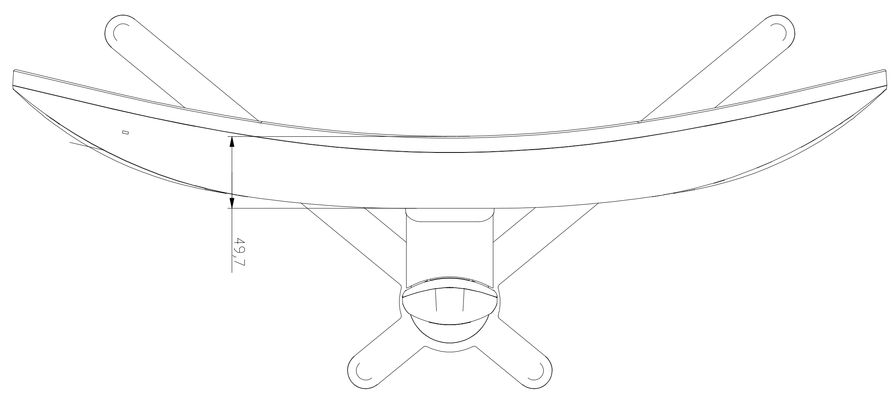
49,7

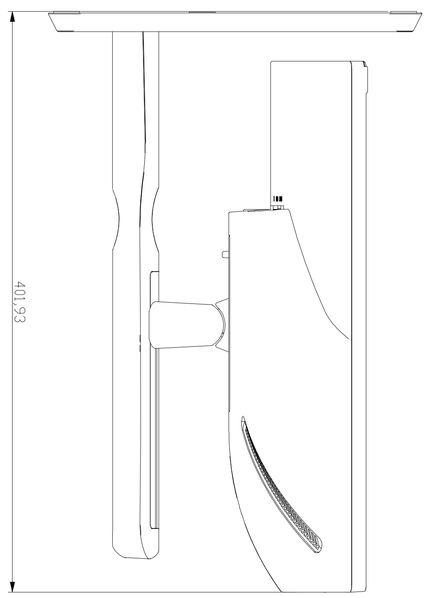
401,93

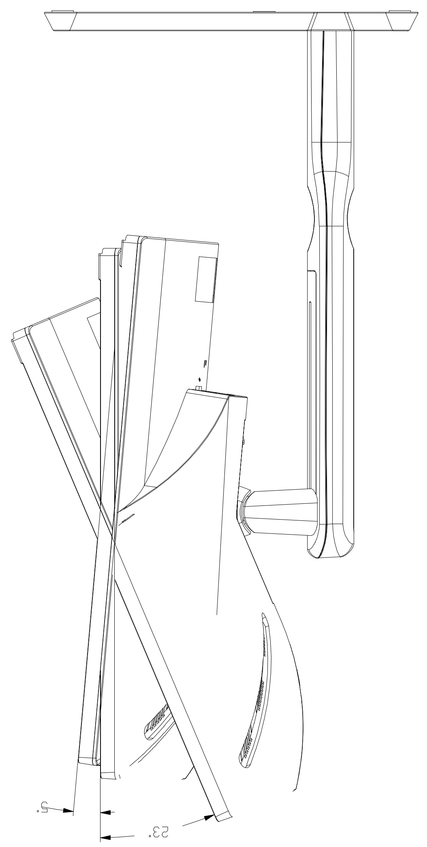
23°
5°
SCALE 0,500