由 Autodesk 教育版产品制作

REVISION LIST							
ITEM	ECN NO.	POSITION	DESCRIPTION WAS	DESCRIPTION IS	DATE	UPDATED BY	APPROVED BY

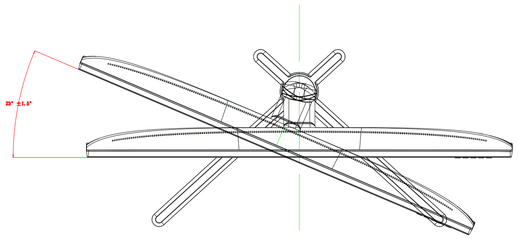

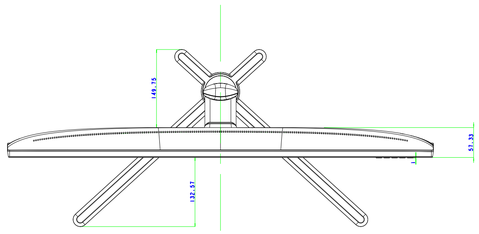

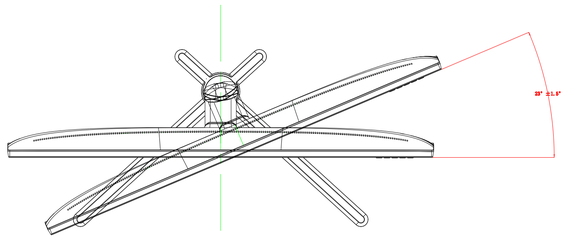

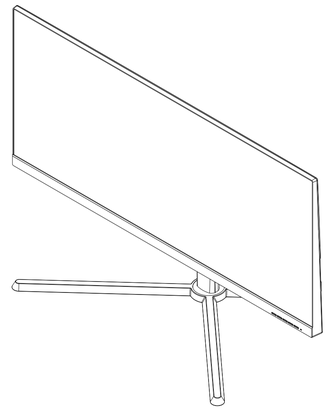

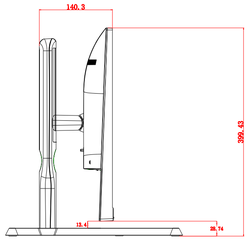

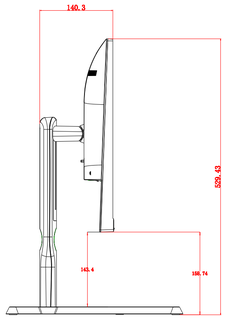

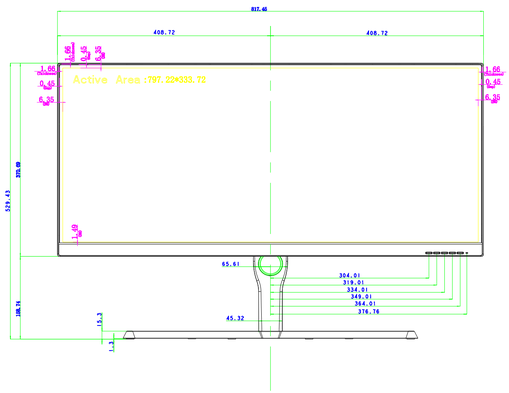

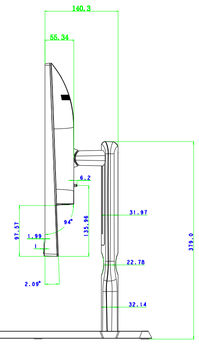

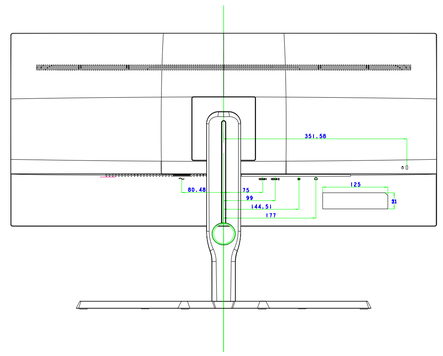

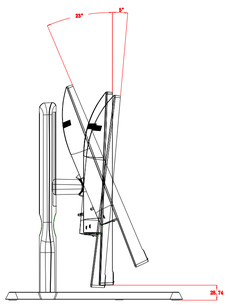

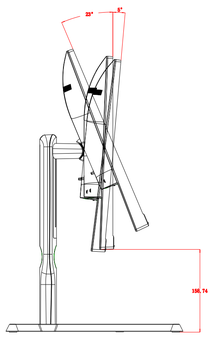

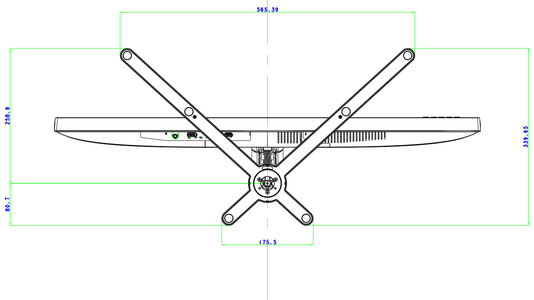

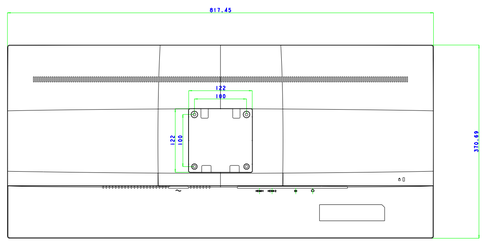

RoHS

TOLERANCE UNLESS OTHERWISE SPECIFIED (mm)			
RANGE OF DIM.	METAL & PLASTIC	POLYFOAM	CARTON
0~10	±0.10		
10~50	±0.20		
50~120	±0.30	±0.0.5	±3.0%0
120~250	±0.50		
250~500	±0.80		
500~1000	±1.0	±0.1.0	
1000~2000	±1.50	±0.1.5	
2000~3000	±2.0	±0.2.0	
AVOID SHRINK METHOD		±0.2	
Internal Diameter of Plastic Screw Boss		±0.05	

MODEL:		PROJ: ED-19000_LGHC2XH_H1L_EC PROJ: ED-3000_LGHC2XH_H1L_EC
SHIP VIA:	TECHNOLOGY LICENSE REQUIRED	
DATE:	2022-04-01	
SCALE:	1:2	SHEET NO.
		LJ34G3XM_DJ 内屏幕
DRAWN:		TPV Technology Ltd.
APPD:	DATE:	13 OF 13
		MODEL NO. LJ34G3XM_DJ

由 Autodesk 教育版产品制作