REVISION RECORD							
ITEM	ECN NO.	POSITION	DESCRIPTION WAS	DESCRIPTION IS	DATE	UPDATED BY	APPROVED BY

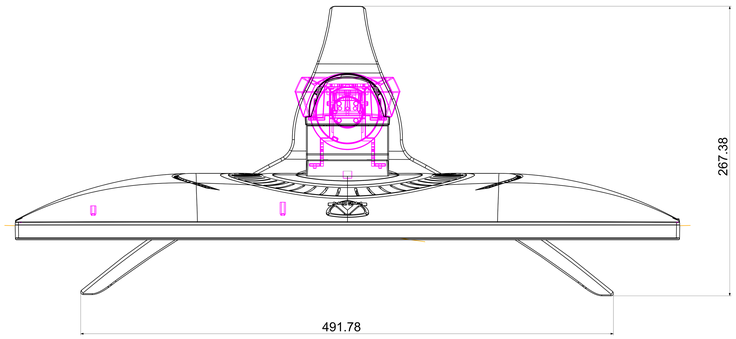

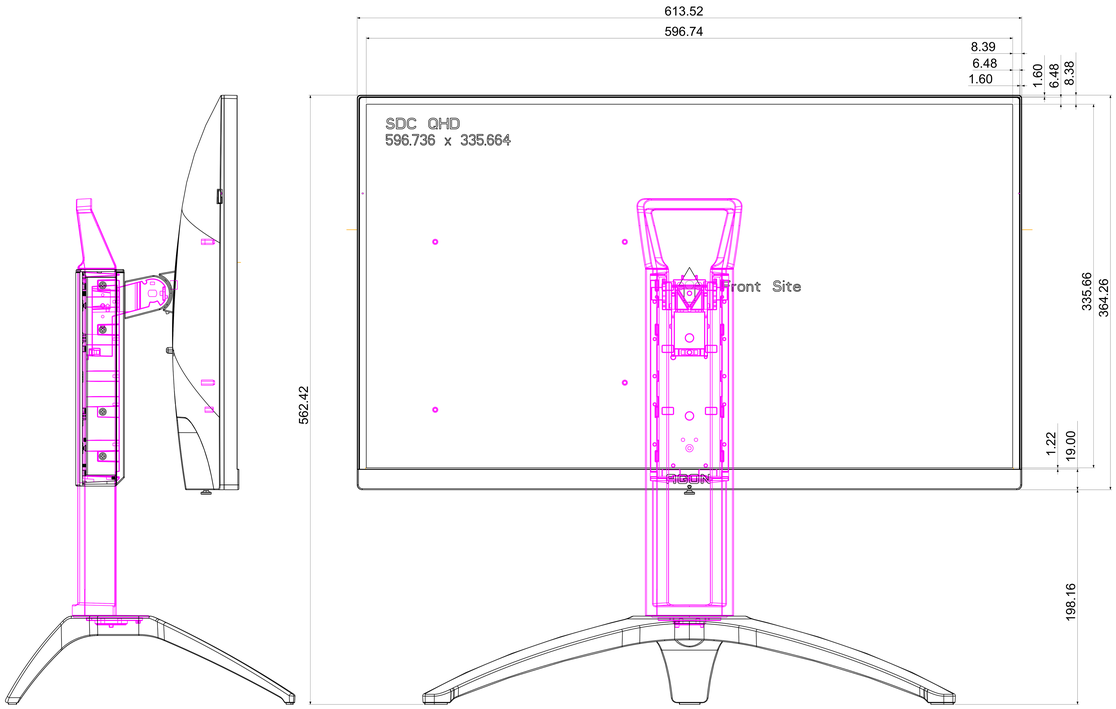

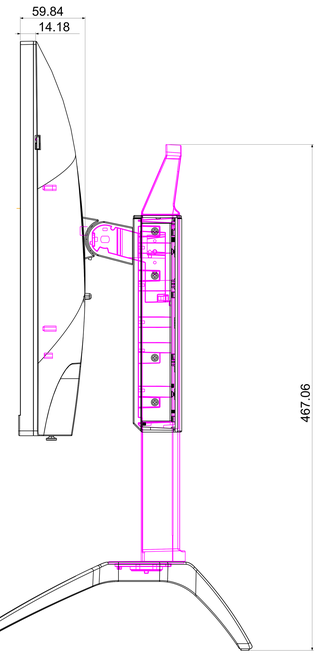

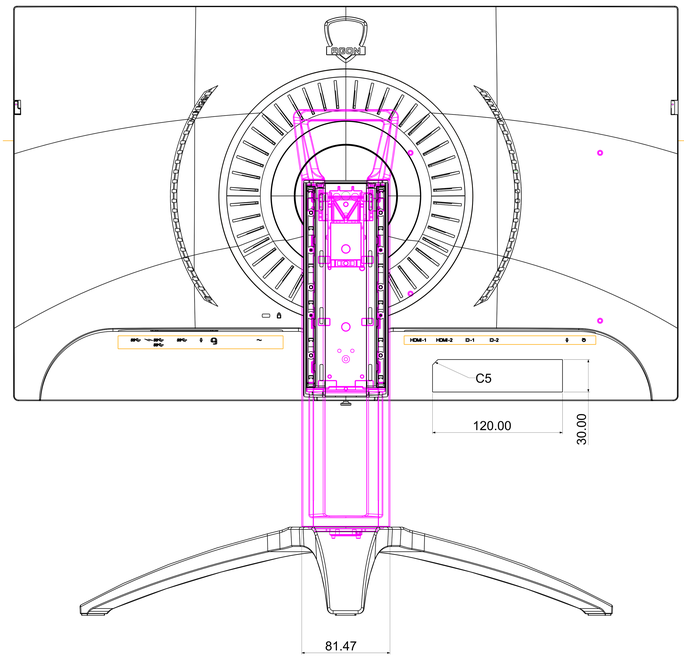

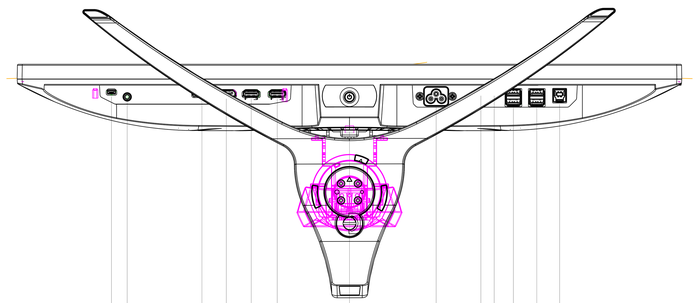

RoHS

TOLERANCE UNLESS OTHERWISE SPECIFIED (mm)			
RANGE OF DIM	METAL & PLASTIC	POLYFOAM	CARTON
0~6	±0.05		
6~30	±0.10		
30~120	±0.20	+0/-2.0	
120~300	±0.25		+2/-0
300~500	±0.35		
500~1200	±0.40	+0/-3.0	
1200~UPON	±0.50	+0/-4.0	
ANGLE (SHEET METAL)		±1°	
Internal Diameter of Plastic Screw Boss		±0.05	

MODEL		PROJ ID 8:4G:42:FD:4EF	PROJ ID 9:4G:42:FD:A:0A:0Bd
UNIT mm	TOLERANCES UNLESS OTHERWISE SPECIFIED / DIMENSIONS ANGLE	TBD	
SCALE 1:1	SHEET SIZE		
		TBD	
DRAWN	DATE 27-Jun-19	TPV Technology Ltd.	1:1 TOP MNT
CHECK	DATE		SCALE TOP